Product Owner's Manual **EN**

FLOMEC®

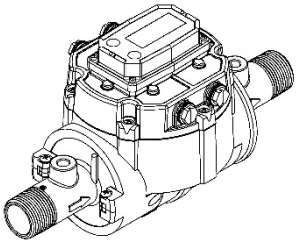

NPT Meter
(1/2 in. to 2 in.)
Shown with Display Mount Cover Plate and Display

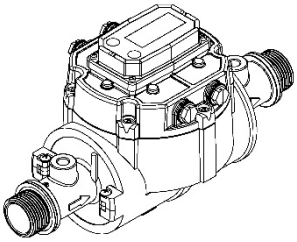

BSPP Meter
(1/2 in. to 2 in.)
Shown with Display Mount Cover Plate and Display

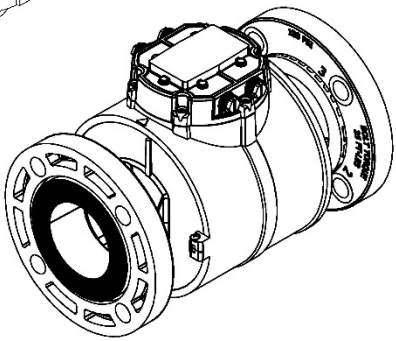

ANSI Flanged Meter
(3 in. & 4 in.)
Shown with Plain Cover Plate and Pulse Out Transmitter (QB)

QSE SERIES
ELECTROMAGNETIC METER

2/2021 920896-01 Rev. AA

Please save these instruction for future reference. Read carefully before attempting to assemble, install, operate or maintain the product described.

Protect yourself and others by observing all safety information. Failure to comply with instructions could result in personal injury and/or property damage.

Please refer to back cover for information regarding this product's warranty and other important information.

DO NOT RETURN THIS PRODUCT TO THE STORE!

Please contact Great Plains Industries, Inc.® before returning any product. If you are missing parts, or experience problems with your installation, contact our Customer Support Department. We will be happy to assist you.

Call: 888-996-3837 or 316-686-7361

Email: meters@gplains.com

SAVE FOR YOUR RECORDS

Model #: _____

Serial #: _____

Purchase Date: _____

FLOMEC®

TABLE OF CONTENTS

BEFORE YOU BEGIN

Usage

- This meter is CSA, NSF, CE and China RoHS approved and has an IP67 environmental rating.

Power Source Requirements

- This meter requires DC power. For this application, the power is provided by the customer power supply. See meter specifications section for detailed information.

UNPACKING

Inspect

- Upon receipt, examine your equipment for visible damage that may have occurred during shipment. If any items appear damaged or missing, contact your distributor.

- See General Safety Instruction, and all Cautions, Warnings, and Dangers as shown.

GENERAL SAFETY INSTRUCTIONS

IMPORTANT: It is your responsibility to:

- Ensure that all equipment operators have access to adequate instructions concerning safe operating and maintenance procedures.

⚠ CAUTION	***This product is not approved for use with petroleum products (diesel fuel, unleaded gasoline, jet fuel, kerosene, etc.), aromatic hydrocarbons or other incompatible chemicals***
⚠ CAUTION	***This product is not approved for use in hazardous locations.***
⚠ WARNING	***When applying power, adhere to specifications listed in appropriate electronics manual.***
⚠ CAUTION	***Disconnect external power before attaching or detaching input or output wires.***
⚠ WARNING	***Compatibility of this product's material and the process fluid and/or environment should be considered prior to putting into service.***
⚠ WARNING	***Product should never be operated outside its published specifications for temperature or pressure. See specifications for your model.***
⚠ WARNING	***Make sure flow and pressure have been eliminated from process pipe prior to installing or removing product.***
⚠ CAUTION	***Installation near high electromagnetic fields and high current fields is not recommended and may result in inaccurate readings.***
⚠ CAUTION	***Do not allow water to freeze in meter. Ice expansion may burst the plastic housing.***
⚠ CAUTION	***Do not allow this meter to be used with steam.***

SPECIFICATIONS

Design Type: Electromagnetic

INLET AND OUTLET	
NPT MODELS	
QSE05NPT	1/2 inch NPT
QSE07NPT	3/4 inch NPT
QSE10NPT	1 inch NPT
QSE15NPT	1-1/2 inch NPT
QSE20NPT	2 inch NPT
BSPP MODELS	
QSE05BSP	1/2 inch BSPP (ISO 228 - G 1/2)
QSE07BSP	3/4 inch BSPP (ISO 228 - G 3/4)
QSE10BSP	1 inch BSPP (ISO 228 - G 1)
QSE15BSP	1-1/2 inch BSPP (ISO 228 - G 1 1/2)
QSE20BSP	2 inch BSPP (ISO 228 - G 2)
ANSI FLANGE MODELS	
QSE30FAP	3 inch 150 # ANSI Flange (Polymer)
QSE40FAP	4 inch 150 # ANSI Flange (Polymer)

See electronics manuals for electronic specifications.

WETTED COMPONENTS	
Housing	NORYL™ GFN3 PPE+PS
Electrodes	316L Stainless Steel
Temperature Probes	316 Series Stainless Steel
Pipe Plugs	300 Series Stainless Steel
O-Rings	EPDM (Ethylene Propylene Diene Monomer)
MAXIMUM WORKING PRESSURE	
De-rate maximum working pressure 0.682 PSIG per each degree °F above 70° F	
NPT	150 PSIG @70° F 10.3 BAR @ 21° C
BSPP	150 PSIG @70° F 10.3 BAR @ 21° C
ANSI FLANGE	150 PSIG @70° F 10.3 BAR @ 21° C
POWER SUPPLY	
Voltage Requirement	Min. 12 VDC (Lower voltage will cause inaccurate readings)
	Max. 36 VDC (higher voltage may damage unit)
ELECTRICAL	
Pollution Degree	2
Installation Category	1
Altitude	2,000m Max.
IP67 rated enclosure. CSA approved for indoor use only	

SPECIFICATIONS (Continued)

U.S. Measurement

Unit of Measure:	Gallon
TURNDOWN	60:1

ACCURACY					
Line Size	**Flow Range (GPM)**	**ACCURACY**	**±Uncertainty**		**Typ. K-factor (PPG)**
1/2 inch	0.16 to 10 gpm (.25 to 15 fps)	± 0.5% of Reading	± 0.023 fps	± .015 gpm	4347
3/4 inch	0.33 to 20 gpm (.25 to 15 fps)	± 0.5% of Reading	± 0.012 fps	± .015 gpm	1937
1 inch	0.67 to 40 gpm (.25 to 15 fps)	± 0.5% of Reading	± 0.006 fps	± .015 gpm	1089
1 1/2 Inch	1.33 to 80 gpm (.25 to 15 fps)	± 0.5% of Reading	± 0.003 fps	± .015 gpm	484.1
2 inch	2.5 to 150 gpm (.25 to 15 fps)	± 0.5% of Reading	± 0.003 fps	± .030 gpm	400
3 inch	5 to 300 gpm (.25 to 15 fps)	± 0.5% of Reading	± 0.003 fps	± .060 gpm	121
4 inch	10 to 600 gpm (.25 to 15 fps)	± 0.5% of Reading	± 0.003 fps	± .120 gpm	68.1

FLUID OPERATING TEMPERATURE:	+32° F to +180° F (Do not allow fluid to freeze inside meter.)
STORAGE TEMPERATURE:	–40° F to +228° F
AMBIENT AIR OPERATING TEMPERATURE	0° F to +140° F ALL METERS

There is a correlation between ambient air temperature and maximum fluid operating temperature:

- As ambient air temperature increases, the maximum fluid operating temperature decreases.

See Maximum Temperature Conditions graph named “TEMPERATURES” on page 11 to verify that your process is within allowable meter operating limits.

SPECIFICATIONS (Continued)

Metric Measurement

Unit of Measure:	Litre
TURNDOWN	60:1

ACCURACY					
Line Size	**Flow Range (L/min)**	**ACCURACY**	**±Uncertainty**		**Typ. K-factor (PPL)**
1/2 inch	0.63 to 38 L/min [.076 to 4.57 m/s]	± 0.5% of Reading	± 7.0 mm/s	± .057 L/min	1148.5
3/4 inch	1.27 to 76 L/min [.076 to 4.57 m/s]	± 0.5% of Reading	± 3.7 mm/s	± .057 L/min	511.8
1 inch	2.52 to 151 L/min [.076 to 4.57 m/s]	± 0.5% of Reading	± 2.0 mm/s	± .057 L/min	287.7
1 1/2 Inch	5.05 to 303 L/min [.076 to 4.57 m/s]	± 0.5% of Reading	± 1.0 mm/s	± .057 L/min	127.9
2 inch	9.47 to 568 L/min [.076 to 4.57 m/s]	± 0.5% of Reading	± 1.0 mm/s	± .114 L/min	105.7
3 inch	19 to 1140 L/min [.076 to 4.57 m/s]	± 0.5% of Reading	± 1.0 mm/s	± .227 L/min	30
4 inch	38 to 2270 L/min [.076 to 4.57 m/s]	± 0.5% of Reading	± 1.0 mm/s	± .454 L/min	18

FLUID OPERATING TEMPERATURE:	0° C to +82° C (Do not allow fluid to freeze inside meter.)
STORAGE TEMPERATURE:	–40° C to +108° C
AMBIENT AIR OPERATING TEMPERATURE	-18° C to +60° C ALL METERS

There is a correlation between ambient air temperature and maximum fluid operating temperature:

- As ambient air temperature increases, the maximum fluid operating temperature decreases.

See Maximum Temperature Conditions graph named “TEMPERATURES” on page 11 to verify that your process is within allowable meter operating limits.

SPECIFICATIONS (Continued)

U.S Product Weight

PRODUCT WEIGHT – lb:*		
	NPT / BSPP	ANSI Polymer Flange
1/2 in.	2.5	-
3/4 in.	2.6	-
1 in.	2.7	-
1 1/2 in.	3.9	-
2 in.	4.3	-
3 in.	-	14
4 in.	-	16.3

* Weight with display. For plain cover plates, subtract 0.2 lb.

Metric Product Weight

PRODUCT WEIGHT – kg:*		
	NPT / BSPP	ANSI Polymer Flange
1/2 in.	1.1	-
3/4 in.	1.2	-
1 in.	1.2	-
1 1/2 in.	1.8	-
2 in.	2.0	-
3 in.	-	6.4
4 in.	-	7.4

* Weight with display. For plain cover plates, subtract 0.09 kg.

SPECIFICATIONS (Continued)

Dimensions

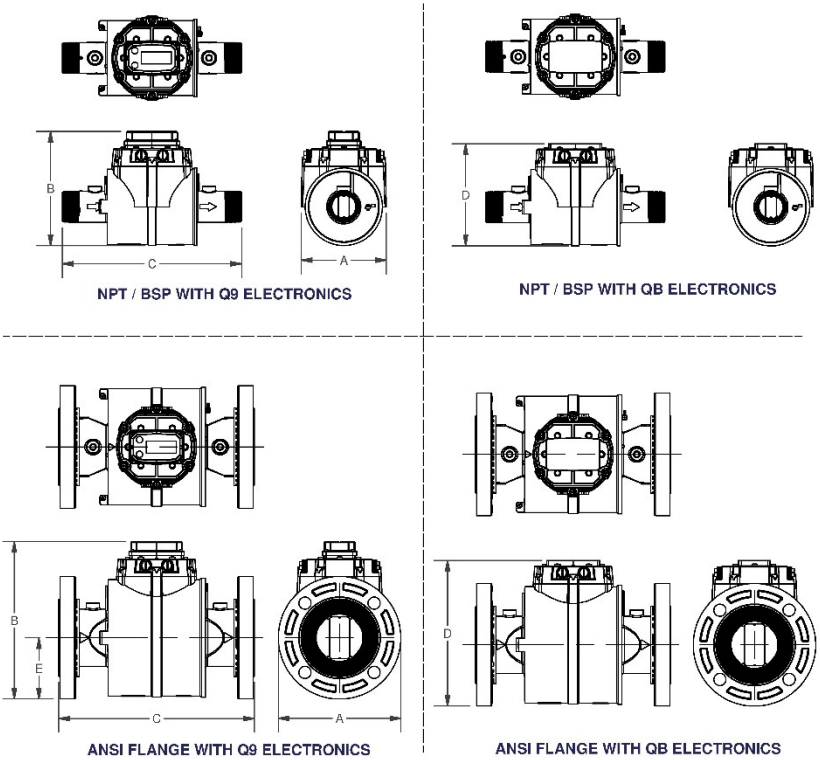

QSE METER DIMENSIONS (NPT, BSPP, ANSI FLANGE) Listed in inches and Centimeters. Centimeters shown in [ ] brackets					
METER SIZE & FITTING	A	B	C	D	E
1/2 in. NPT & BSPP	5.20 [13.21]	5.85 [14.86]	10.50 [26.67]	5.13 [13.09]	1.83 [4.65]
3/4 in. NPT & BSPP	5.20 [13.21]	5.85 [14.86]	10.75 [27.31]	5.13 [13.09]	1.83 [4.65]
1 in. NPT & BSPP	5.20 [13.21]	5.85 [14.86]	11.00 [27.94]	5.13 [13.09]	1.83 [4.65]
1-1/2 in. NPT & BSPP	5.22 [13.26]	6.97 [17.70]	11.00 [27.94]	6.25 [15.88]	2.37 [6.02]
2 in. NPT & BSPP	5.22 [13.26]	6.97 [17.70]	11.00 [27.94]	6.25 [15.88]	2.37 [6.02]
3 in. ANSI Flange	7.50 [19.05]	9.64 [24.48]	12.00 [30.48]	8.92 [22.66]	3.75 [9.53]
4 in. ANSI Flange	9.00 [22.86]	10.39 [26.39]	12.00 [30.48]	9.67 [24.56]	4.50 [11.43]

* If 4-20 mA module is installed, add .90 [2.28] to height.

SPECIFICATIONS (Continued)

Temperatures

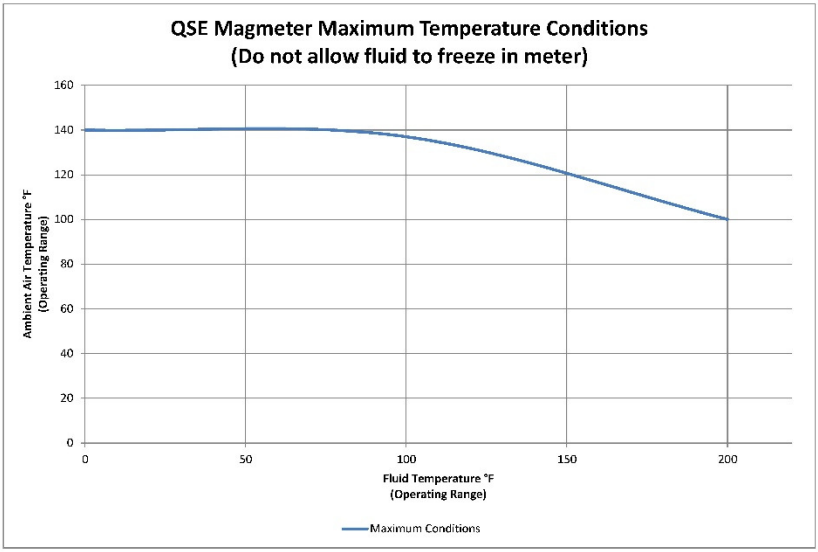

FLUID ELECTRICAL CONDUCTIVITY

Fluid Electrical Conductivity Reference:

The basic unit of fluid conductivity is “mho/cm”, otherwise known as 1 Siemen. However, this unit does not really occur in water, so we typically use one thousandth (mili-) or one millionths (micro-) of it for natural waters (1000 milimhos and 1,000,000 micromhos are equal to one mho).

The useful unit for seawater is milimhos/cm (mS/cm); seawater is around 55 mS/cm. The useful unit for freshwater is micromhos/cm (µmhos/cm, or µS/cm); tap water ranges between 50 and 800 µS/ cm (depending on the source).

Electrical Conductivity of Common Fluids

FLUID	TEMPERATURE (°F)	CONDUCTIVITY (µs/cm)
Coca Cola Syrup	68	600
Coffee Extract	183. 2	5000
Corn Syrup	89.6	16
Ethylene Glycol (Pure)	68	1.07
Gin 90 Proof	77	10
ISO-propyl Alcohol	77	3.5
Molasses	50	300
RC Cola Syrup	77	600
Sugar Solution Dilute	86	585
Urea	77	5000
Vodka 100 Proof	77	4
Water, Distilled	-	0.04
Water, NYC	77	72

NOTE: *This table of fluid conductivity is for reference only, to show the relative conductivity of various fluids. Since the list contains flammable fluids, it is not to be construed as a list of permissible fluids to be used with QSE series meters.*

NOTE: *QSE series meters are for use with water, aqueous solutions and other non-flammable, electrically conductive fluids. Do not use the meter with petroleum products (diesel fuel, unleaded gasoline, jet fuel, kerosene, etc.) or other incompatible chemicals.*

METER OVERVIEW

Introduction

The QSE meter has multiple types of output electronics available. The electronics for the operation of the meter coils and flow tube are housed within the meter body casing. The cover plate is designed in two versions; a plain cover plate or a display mount cover plate. The electronics (QB) and the choice of communications suites (QSI1, QSI2 or QSI3) are housed within the plain cover plate. A display (Q9) is also available mounted to the “display mount” cover plate.

All meters are equipped with galvanically isolated pulse-out electronics (QB) as the default standard, regardless of style of cover plate.

This manual contains overall information related only to the meter. This meter is externally powered and all external wiring connects to the electronics within the cover plate through its threaded ports.

The magnetic coils, electrodes and other electronic components within the main meter body receive power from the electronics housed within the cover plate through a ribbon cable. See the included electronics manuals for meter wiring diagrams specific to your meter electronics.

Important Notice

Your QSE meter is supplied ready for operation in a wide variety of applications. The meter has been factory configured to your order. It is suitable for volumetric flow measurement of non-flammable, electrically conductive liquids that have a minimum fluid conductivity of 10 µS/cm, and are compatible with the wetted components of the meter (See Specification Section).

Fluid conductivity below 50 µS/cm may result in uncertain readings. Consult factory for use with fluids having a conductivity below 50 µS/cm.

Use QSE series meters with water, aqueous solutions and other non- flammable, electrically conductive fluids. A fluid conductivity chart of common liquids is in this manual for your reference. Do not use the meter with petroleum products (diesel fuel, unleaded gasoline, jet fuel, kerosene, etc.) or incompatible chemicals.

QSE series meters are very sensitive to electric noise if operated within 6 inches (15.2cm) of some electric motors, relays, transformers or other sources of electronic noise.

If the QSE series meters are used in a manner not specified by the manufacturer, the protection provided by the equipment may be impaired.

Principle of Operation

Faraday’s Law of Electromagnetic Induction is the operating principle on which the QSE series meters are based. Faraday’s Law (paraphrased) states that a voltage will be induced in a conductor when it passes through a magnetic field, and the induced voltage will be directly proportional to the velocity of the conductor passing through that magnetic field. In this case, flowing liquid is the conductor and the QSE meter creates the magnetic field.

The velocity of the flowing liquid, which must pass through the magnetic field, is the velocity of the conductor. A voltage is induced in the conductive liquid as it passes through the magnetic field. By placing electrodes in calculated locations on the flow tube of the meter, it is possible to accurately measure the induced voltage, thus determining the corresponding velocity and volumetric flow of the liquid.

METER OVERVIEW (Continued)

Safety

- **This product is not approved for use with petroleum products (diesel fuel, unleaded gasoline, jet fuel, kerosene, etc.), aromatic hydrocarbons, flammable fluids or other incompatible chemicals**
- This product is not approved for use in hazardous locations.
- Be sure O-rings and seals are kept in good repair.
- When applying power, adhere to specifications listed in appropriate electronics manual.
- Disconnect external power before attaching or detaching input or output wires.

INSTALLATION

Earth Ground

When making installations, the magnetic flow meter grounding rules have to be observed. The sensors of the QSE flow meter are sensitive to any electrical noise that is always present in piping systems. The fluid in piping systems usually carries significant levels of static electricity, and should be grounded for the QSE meter to be at its best performance.

As part of the installation, it is important to understand the importance of having the QSE meter connected to “earth ground”. Earth grounding helps ensure electronic component stability and reliability by using the earth to absorb any static charge buildup or spurious signal noise that can affect the meter electronics. Earth ground in this installation is **NOT** the ground wire in the customer isolated power supply.

Process Fluid Grounding

Establishing a process fluid ground is one of the most important installation details. Proper process fluid grounding ensures that the sensor and fluid are at the same electrical potential so that only the induced flow signal is measured. The process fluid grounding provides a stable base potential reference for measuring the induced flow signal (the differential between the base potential reference and the fluid flow potential created by the sensor magnetic field). Process fluid grounding should be established on both sides (upstream and downstream) of the sensor elements.

By connecting the QSE sensor, the fluid, and the reference used by the internal electronics to a stable, noise free reference point (earth ground), the user is ensured of getting the best performance from their magnetic flowmeter.

Each QSE meter has a ground lug with a removable ring terminal located in the circular wall adjacent to the outlet end of the meter. This ground lug is connected internally to the electronics and sensors and is the meter connection to earth ground (the base potential reference).

Grounding Summary

1. Ground sensor to meter ground lug. (Done at factory.)
2. Ground electronics to meter ground lug. (Done at factory.)
3. Ground process fluid to meter ground lug (customer responsibility). Various process fluid grounding examples are shown on the following pages (see Figures 1, 2, and 3) to assist you in completing this item. The examples cover various meter installation situations.
4. Ground the meter ground lug to earth ground (customer responsibility).

All of the examples on the following pages show 14-16 AWG ground wire (customer supplied) being used. A ground wire should be crimped to the ring terminal on the meter ground lug and the other end of the ground wire connected to earth ground (item 4 above).

INSTALLATION (Continued)

GROUNDING - Threaded Fittings - All Process Pipe Materials

Using GPI Grounding Probes (Kit P/N 145630-529)

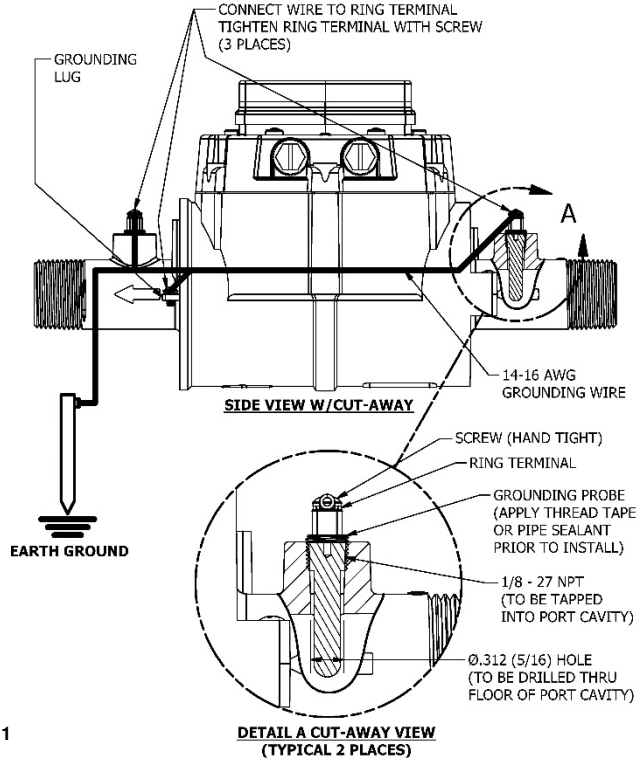

Figure 1

GROUNDING - Threaded Fittings - Non-Conductive (Plastic) Pipe

Using Commercially Available Metal Couplings

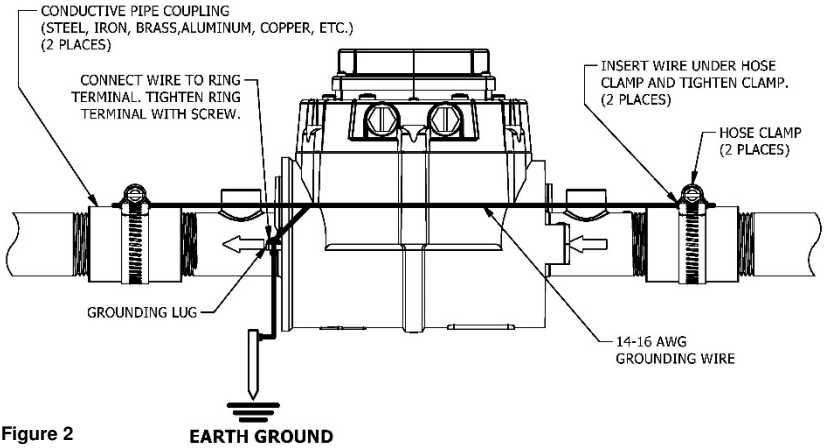

Figure 2

INSTALLATION (Continued)

GROUNDING - ANSI Flange - Non-Conductive (Plastic) Pipe

Using Commercially Available Grounding Rings

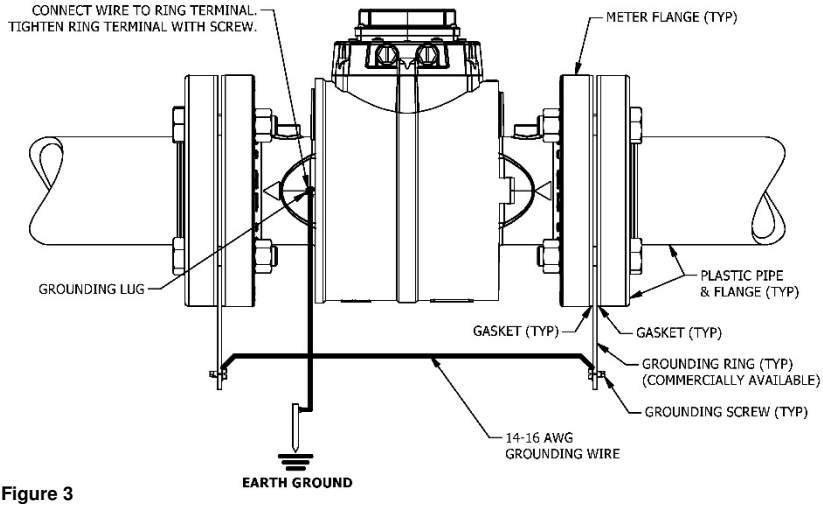

Figure 3

INSTALLATION (Continued)

Connections

Install your meter in-line with either horizontal flow or vertical flow. The best meter position for horizontal flow setups is with the meter rotated slightly (about 1 o'clock or 2 o'clock) to tilt the top from the horizontal plane (see Figure 4). This prevents sediment from settling on the lower set of sensing electrodes. Install the meter with the flow arrow pointing in the direction of fluid flow.

Plan to install meter with minimum straight pipe lengths at inlet and outlet ends. The straight run lengths noted below represent the minimum requirements for accurate flow measurement (see Figure 4). For optimum performance, provide as much additional straight run as possible.

- Upstream from the meter, allow a minimum straight pipe length of (5) times the pipe diameter from bends and obstructions.
- Downstream from the turbine, allow a minimum straight pipe length of (3) times the pipe diameter from bends and obstructions.
- Avoid downward flow that can lead to partially filled pipes

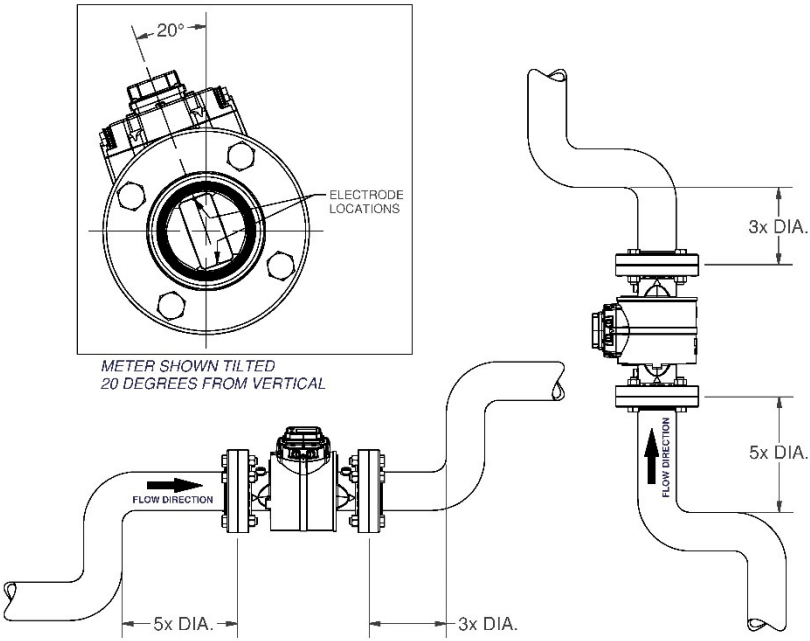

Figure 4

INSTALLATION (Continued)

NPT Fittings

Seal all pipe threads with an appropriate non-lubricated thread sealant (such as Loctite® No More Leaks™ Plastic Pipe Thread Sealant or NSF equivalent for NSF applications). Make sure the thread sealant does not intrude into the flow path. Hand tighten the meter at the housing ends. Do not use a wrench or similar tool to tighten as this can damage the housing.

NOTE: *If connecting to new female pipe threads, burrs and curls can adversely affect accuracy. Correct the problem prior to meter installation.*

BSPP Fittings

The BSPP meter includes a plastic bag containing (2) O-rings and (2) backup rings that must be installed onto the meter. They are used for sealing the fitting ends of the meter to process piping. Before installing the meter, install an O-ring in the O-ring gland on each housing end, then fit a backup ring over each O-ring (see Figure 5).

The BSPP meter is now ready for installation. Hand tighten the meter at the housing ends. **DO NOT** use a wrench or similar tool to tighten as this can damage the housing.

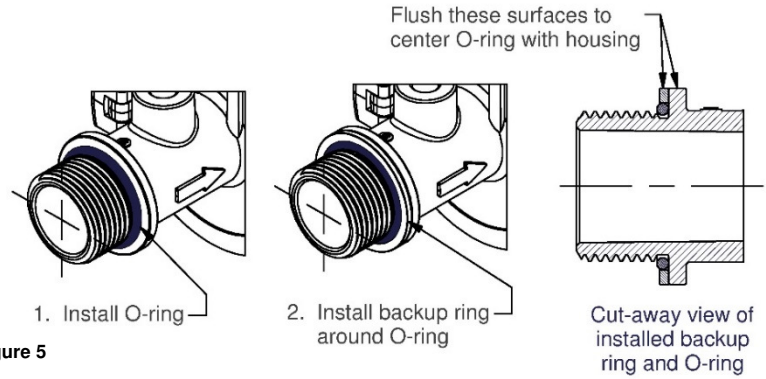

Figure 5

ANSI Flange Fittings

The flanges supplied with your meter allow the meter to be oriented regardless of the mating flanges position. The meter flanges and their steel half-ring “keys” must be installed onto the meter by the customer before meter installation (see Figure 6).

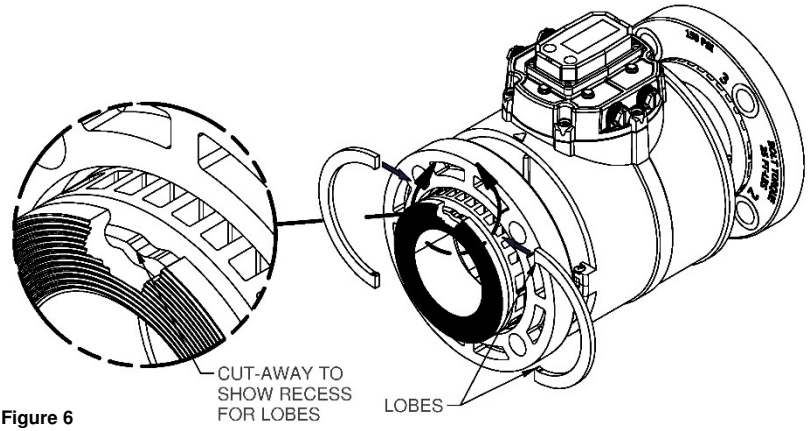

Figure 6

INSTALLATION (Continued)

Installing Flanges on Meter

With the mating face of the flange facing outboard, slide flange over one end of the meter. Position (2) half-rings in the retaining groove and snap into place. Each end of a half-ring has a small lobe that snaps into a recess at the top and bottom of the groove for retention. Repeat at other end.

Customer to Provide:

- Ring Gaskets or Full-Face Gaskets approved for use with type flange installed and the fluid being monitored (2 required).
- 5/8 in. bolts and nuts for ANSI flanges. Four per side for 3-inch meters; eight per side for 4-inch meters.
- Torque bolts using a star pattern to 25 ft-lbs (33.9 N•m). For best results, always verify torque accuracy before use.

NOTE: *Do not over tighten the flange bolts. This may cause the gasket to be compressed into the flow stream and may decrease the accuracy of the meter.*

When properly installed, the flow meter will only measure flow in that portion of the piping system where the meter is installed. Choose the location with the longest straight unobstructed run of pipe, keeping in mind that in some applications it may be possible to locate the meter in either the supply or return pipe.

NOTE: *Your meter may have two 1/8 in. NPT pipe plugs installed on top of the flow tube near each end. They have been installed and sealed at the factory and are for use only with optional temperature sensing probes for energy use calculations in specialized applications.*

WARNING: *Compatibility of this product's material and the process fluid and/or environment should be considered prior to putting into service.*

WARNING: *Product should never be operated outside its published specifications for temperature or pressure. See specifications for your model.*

WARNING: *Make sure flow and pressure have been eliminated from process pipe prior to installing or removing product.*

WARNING: *When connecting product to process piping: For NPT fittings use non-lubricated thread sealant (such as Loctite® No More Leaks™ Plastic Pipe Thread Sealant or NSF equivalent for NSF applications). For BSPP fittings use O-ring seals. For flange fittings use flange gaskets.*

CAUTION: *Installation near high electromagnetic fields and high current fields is not recommended and may result in inaccurate readings.*

CAUTION: *Do not allow water to freeze in meter. Ice expansion may burst the plastic housing.*

CAUTION: *Do not allow this meter to be used with steam.*

CAUTION: *Piping should be properly supported to prevent undue structural stress on the meter body.*

CAUTION: *Pipe misalignment can cause strain on meter bodies resulting in permanent damage.*

CAUTION: *Do not install the meter to metal pipe. The plastic meter will be the weak point, resulting in permanent damage.*

INSTALLATION (Continued)

Wiring

All electronic options are associated with a matching style of meter cover plate. This cover plate has four threaded ports, compatible with PG7 threads, for gaining wiring access to the electronics inside the cover plate. The meter is shipped with the ports environmentally sealed with a threaded plug and seal. Remove one or more of these plugs as required to install the supplied port fittings below.

Each meter is supplied with cable gland strain reliefs with O-rings and 1/2 NPT adapters with seals for use in the threaded ports of the meter cover plate. Select the port fittings that fit your process and replace the threaded plugs in the cover plate with the fittings as required. The threaded plugs installed at the factory may be left in any unused cover plate port indefinitely.

It is recommended that a “removable” thread-locker (fluid, stick, tape, spray, etc.) be used when installing the strain reliefs or adapters into the cover plate ports.

Strain Reliefs:

The cable gland strain reliefs will accommodate a cable diameter of 0.11 - 0.26 inches (2.79 - 6.6mm) and provide an environmental seal around the cable when the dome-nut is tightened.

NPT Adapters:

The 1/2 NPT adapter fittings are used for attaching flex conduit to the meter, for those applications that require cable runs to be enclosed in conduit.

- Cable to be provided by customer to accommodate job requirements. Cable is not included with meter.
- This meter is externally powered. The magnetic coils, electrodes and other electronic components within the main meter body receive power from the electronics housed within the cover plate. All external wiring connects to those cover plate electronics through threaded ports. See the included electronics manuals for meter wiring diagrams specific to this meters electronics.

TROUBLE SHOOTING

MEASUREMENT IS NOT ACCURATE	
PROBABLE CAUSE	**SOLUTION**
Debris/particles in liquid	Need proper filtration
Air in liquid - No back pressure	Increase back pressure on meter to eliminate air
Air in liquid - Plumbing installation	Install meter away from other fittings or flow obstructions. Do not allow meter to discharge to atmosphere.
Air in liquid - Pump cavitation	Install meter away from pump
Pipe not full - No back pressure	Increase backpressure on meter to eliminate air.
Pipe not full - Plumbing installation	Install meter where pipe is always full of liquid. Do not allow meter to discharge to atmosphere.
Conductivity of fluid too low	Consult liquid properties
Operating outside meter limits	Increase/decrease flow rate to proper meter specification. Review temperature limits.
Electrical noise	Install meter away from devices that emit EMF.
Ground loop	Meter may need to be earth grounded
Electrodes not clean	Clean electrode tips
Interface device not properly calibrated	Consult device instructions and specifications.
NORMAL FLOW BUT METER DOES NOT WORK	
PROBABLE CAUSE	**SOLUTION**
Wiring not correct	Consult wiring diagrams. Review installation.
Operating outside meter limits	Review voltage requirements
Meter installed backwards	Check to see if the direction of the arrows on the meter match flow direction.

MAINTENANCE

The meter is virtually maintenance- free. However, it is important to keep the meter clean and free of contaminants.

CAUTION: *Do not allow liquids to dry inside the meter. The electrodes may develop a film that degrades accuracy.*

Remove internal debris or deposits using soft brush or small probe.

NOTE: *Make sure the arrow on the meter is pointed in the direction of fluid flow (see Figure 2).*

SERVICE

For warranty consideration, contact your local distributor. If you need further assistance, contact the GPI Customer Service Department at:

1-888-996-3837

You will need to:

- Provide information from the decal on your meter.
- Receive a Return Authorization number.
- Flush any fluid from the meter before shipping to the factory.

CAUTION: *Do not return the meter without specific authority from the GPI Customer Service Department. Due to strict regulations governing transportation, handling and disposal of hazardous or flammable liquids, GPI will not accept meters for rework unless they are completely free of liquid residue.*

The Waste Electrical and Electronic Equipment (WEEE) directive (2002/96/EC) was approved by the European Parliament and the Council of the European Union in 2003. This symbol indicates that this product contains electrical and electronic equipment that may include batteries, printed circuit boards, liquid crystal displays or other components that may be subject to local disposal regulations at your location. Please understand those regulations and dispose of this product in a responsible manner.

RoHS Compliant (2011/65/EU)

This product is in compliance with the RoHS Directive of the European Parliament and of the Council on the Restriction of the Use of Certain Hazardous Substances in Electrical and Electronic Equipment.

ILLUSTRATED REPLACEMENT PARTS LIST

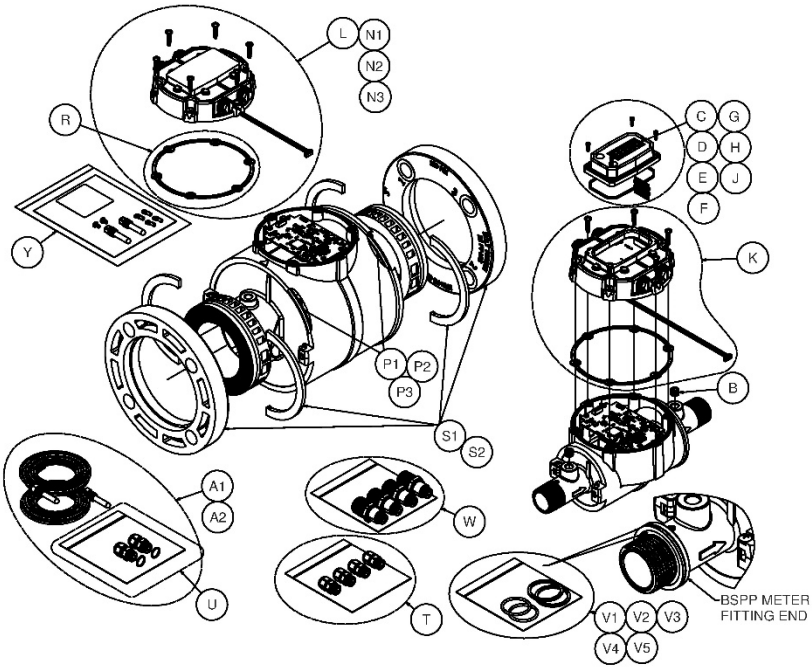

REF.	PART NUMBER	DESCRIPTION	NO REQ'D.
A1	145500-01	Kit, 1 in. temperature sensor probe Includes: (2) probes, (2) strain reliefs w/O-rings	1
A2	145500-02	Kit, 2 in. temperature sensor probe Includes: (2) probes, (2) strain reliefs w/O-rings.	1
B	145500-03	Kit, pipe plug, 1/8-27 NPT stainless steel Includes: (2) plugs.	1
C	145501-01	Kit, Q9 computer display, 1/2 in. Includes: Computer display w/decal, seal, 10-pin connector.	1
D	145501-02	Kit, Q9 computer display, 3/4 in. Includes: Computer display w/decal, seal, 10-pin connector.	1
E	145501-03	Kit, Q9 computer display, 1 in. Includes: Computer display w/decal, seal, 10-pin connector.	1
F	145501-04	Kit, Q9 computer display, 1-1/2 in. Includes: Computer display w/decal, seal, 10-pin connector.	1
G	145501-05	Kit, Q9 computer display, 2 in. Includes: Computer display w/decal, seal, 10-pin connector.	1

H	145501-06	Kit, Q9 computer display, 3 in. Includes: Computer display w/decal, seal, 10-pin connector.	1
J	145501-07	Kit, Q9 computer display, 4 in. Includes: Computer display w/decal, seal, 10-pin connector.	1
K	145500-14	Kit, QB w/display cover plate. Includes: Display cover plate, QB electronics with ribbon cable, (6) screws, cover plate seal.	1
L	145500-15	Kit, QB w/plain cover plate. Includes: Plain cover plate w/decal, QB electronics with ribbon cable, (6) screws, cover plate seal.	1
N1	145503-01	Kit, QSI1 w/plain cover plate. Includes: Plain cover plate w/decal, QSI1 electronics with ribbon cable, (6) screws, cover plate seal.	1
N2	145503-02	Kit, QSI2 w/plain cover plate. Includes: Plain cover plate w/decal, QSI2 electronics with ribbon cable, (6) screws, cover plate seal.	1
N3	145503-03	Kit, QSI3 w/plain cover plate. Includes: Plain cover plate w/decal, QSI3 electronics with ribbon cable, (6) screws, cover plate seal.	1
P1	145500-04	Kit, O-rings, For 1/2 in., 3/4 in. and 1 in. housings. Includes: (2) O-rings.	1
P2	145500-05	Kit, O-rings, For 1-1/2 in. and 2 in. housings. Includes: (2) O-rings.	1
P3	145500-06	Kit, O-rings, For 3 in. and 4 in. housings. Includes: (2) O-rings.	1
R	145500-07	Kit, seal, cover plate. Includes: (1) Cover plate seal.	1
S1	145500-08	Kit, ANSI flange, polymer, 3 in. Includes: (2) 3 in. polymer flanges, (4) 3 in. half-ring keys.	1
S2	145500-09	Kit, ANSI flange, polymer, 4 in. Includes: (2) 4 in. polymer flanges, (4) 4 in. half-ring keys.	1
T	145500-12	Kit, strain relief, cover plate. Includes: (4) PG7 thread strain reliefs, .11 - .26 cable diameter range	1
U	145500-13	Kit, strain relief, temperature sensor. Includes: (2) PG7 thread strain reliefs (reduced fit), .08 - .20 cable diameter range	1
V1	145500-20	Kit, O-ring & backup ring, 1/2 in. BSPP. Includes: (2) O-rings, (2) backup rings.	1
V2	145500-21	Kit, O-ring & backup ring, 3/4 in. BSPP. Includes: (2) O-rings, (2) backup rings.	1

V3	145500-22	Kit, O-ring & backup ring, 1 in. BSPP. Includes: (2) O-rings, (2) backup rings.	1
V4	145500-23	Kit, O-ring & backup ring, 1-1/2 in. BSPP. Includes: (2) O-rings, (2) backup rings.	1
V5	145500-24	Kit, O-ring & backup ring, 2 in. BSPP. Includes: (2) O-rings, (2) backup rings.	1
W	145500-25	Kit, PG7 to 1/2 NPT adapter, cover plate. Includes: (4) PG7 to 1/2 NPT male adapters	1
X	145177-501	Assembly, Ribbon Cable (9 INCH), Spare	1
Y	145630-529	Kit, grounding probe Includes: (2) grounding probes, (2) screws, (4) terminal rings, instruction sheet.	1

NOTES

NOTES

LIMITED WARRANTY

Great Plains Industries, Inc. 5252 E. 36th Street North, Wichita, KS USA 67220-3205, hereby provides a limited warranty against defects in material and workmanship on all products manufactured by Great Plains Industries, Inc. This product includes a 2-year warranty.

Manufacturer's sole obligation under the foregoing warranties will be limited to either, at Manufacturer's option, replacing or repairing defective Goods (subject to limitations hereinafter provided) or refunding the purchase price for such Goods theretofore paid by the Buyer, and Buyer's exclusive remedy for breach of any such warranties will be enforcement of such obligations of Manufacturer. The warranty shall extend to the purchaser of this product and to any person to whom such product is transferred during the warranty period.

The warranty period shall begin on the date of manufacture or on the date of purchase with an original sales receipt. This warranty shall not apply if:

A. The product has been altered or modified outside the warrantor's duly appointed representative;

B. The product has been subjected to neglect, misuse, abuse or damage or has been in- stalled or operated other than in accordance with the manufacturer's operating instructions.

To make a claim against this warranty, contact the GPI Customer Service Department at:

316-686-7361 or 888-996-3837. Or by mail at:
Great Plains Industries, Inc.
5252 E. 36th St. North
Wichita, KS, USA 67220-3205

The company shall, notify the customer to either send the product, transportation prepaid, to the company at its office in Wichita, Kansas, or to a duly authorized service center. The company shall perform all obligations imposed on it by the terms of this warranty within 60 days of receipt of the defective product.

GREAT PLAINS INDUSTRIES, INC. EXCLUDES LIABILITY UNDER THIS WARRANTY FOR DIRECT, INDIRECT, INCIDENTAL AND CONSEQUENTIAL DAMAGES INCURRED IN THE USE OR LOSS OF USE OF THE PRODUCT WARRANTED HEREUNDER.

The company herewith expressly disclaims any warranty of merchantability or fitness for any particular purpose other than for which it was designed.

This warranty gives you specific rights and you may also have other rights which vary from U.S. state to U.S. state.

Note: In compliance with MAGNUSON MOSS CONSUMER WARRANTY ACT – Part 702 (governs the resale availability of the warranty terms).

NSF Certified to NSF/ANSI 61-G & 372

IP67

Wichita · Sydney

GREAT PLAINS INDUSTRIES GPI

Great Plains Industries, Inc. / 888-996-3837 / flomecmeters.com

Product Owner's Manual

EN

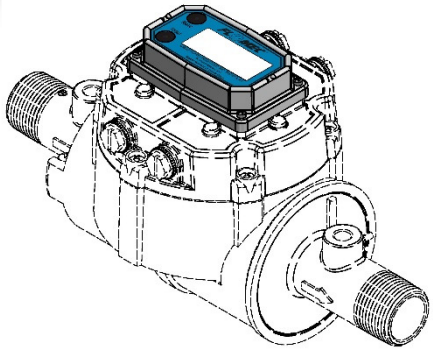

QSE Q9 COMPUTER ELECTRONICS

FOR USE WITH QSE MAG METERS WITH QB ELECTRONICS

09/2021

920896-18 Rev -

Please save these instructions for future reference. Read carefully before attempting to assemble, install, operate or maintain the product described.

Protect yourself and others by observing all safety information. Failure to comply with instructions could result in personal injury and/or property damage.

Please refer to back cover for information regarding this product's warranty and other important information.

DO NOT RETURN THIS PRODUCT TO THE STORE!

Please contact Great Plains Industries, Inc.® before returning any product. If you are missing parts, or experience problems with your installation, contact our Customer Support Department. We will be happy to assist you.

Call: 888-996-3837 or 316-686-7361

Email: meters@gplains.com

SAVE FOR YOUR RECORDS

Model #: _____

Serial #: _____

Purchase Date: _____

QSE Q9 TABLE OF CONTENTS

BEFORE YOU BEGIN

Usage

- This computer electronics is designed specifically for use on FLOMEC® QSE meters. It is also designed to work with several other FLOMEC products.

Power Source Requirements

- This computer requires DC power. For this application, the power is provided by the customer power supply, through the internal meter circuitry, to the computer. See specifications section for detailed information.

Tools and Materials Needed

- Phillips screwdriver.

UNPACKING

Contents

Qty. 1 – QSE Q9 Computer Electronics (Externally Powered)
Qty. 1 - Owner's Manual

Inspect

- Upon receipt, examine your equipment for visible damage. The computer is a precision measuring instrument and should be handled as such. If any items appear damaged or missing, contact your distributor.

- See General Safety Instruction, and all Cautions, Warnings, and Dangers as shown.

GENERAL SAFETY INSTRUCTIONS

QSE Q9 Computer Electronics (Externally Powered)

IMPORTANT: It is your responsibility to:

- Ensure that all equipment operators have access to adequate instructions concerning safe operating and maintenance procedures.

⚠ WARNING The apparatus enclosure may contain aluminum and is considered to constitute a potential risk of ignition by impact or friction. Care must be taken into account during installation and use to prevent impact or friction.

⚠ WARNING Part of the enclosure is constructed from plastic. To prevent the risk of electrostatic sparking, the plastic surface should only be cleaned with a damp cloth.

⚠ WARNING This product should never be electrically connected to any other device in the hazardous location. Consult manufacturer for exceptions.

⚠ WARNING Compatibility of this product's material and the process fluid and/or environment should be considered prior to putting into service.

⚠ WARNING This product should never be operated outside its published specifications for temperature.

⚠ WARNING This product is NOT INTENDED for use with flammable liquids.

⚠ WARNING When handling hazardous liquids, always follow the liquid manufacturer's safety precautions.

- When working in hazardous environments, always exercise appropriate safety precautions.

SPECIFICATIONS

QSE Q9 COMPUTER ELECTRONICS (EXTERNALLY POWERED)

MECHANICAL	
Housing Material	Transparent Amorphous Nylon
Operating Temperature	+0°F to +130°F (-18°C to +55°C)
Storage Temperature	-40°F to +158°F (-40°C to +70°C)
ELECTRICAL	
Input Pulse Rate	Frequency Range: 0.25 Hz – 3kHz
K-Factor	Minimum: 0.001 pulses/unit Maximum: >999,999 pulses/unit
Field Calibration Correction	Minimum: -99.999% Maximum: +99.999%
Readout Totals	Minimum Display: 0.001 Maximum Display: 999,999 (x100)
Field Calibration	Yes
Power*	Power is provided via customer supplied external power to the meter, through the meter circuitry, to the computer. Refer to QSE Electromagnetic Meter Manual "Specification Section" for correct external power supply requirements. *NOTE: For externally powered daughter board modules see specific module owner's manual for voltage specifications.*

STANDARD FEATURES INCLUDE

- (2) Totalizing Registers
- (1) Factory Calibration Curve
- (1) Field Calibration Curve
- Rate of Flow Feature
- Flowrate Time Period in Day, Hour, minutes, or Seconds

SPECIFICATIONS (continued)

COMPUTER ELECTRONICS TERMINAL CONNECTIONS

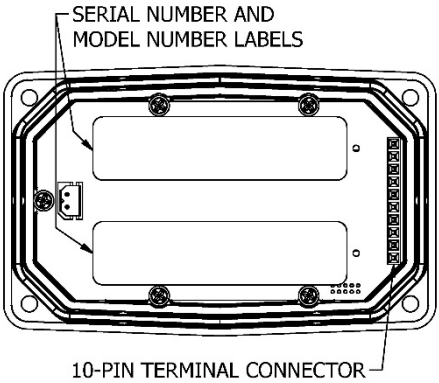

Figure 1

DIMENSIONS

Length A	Height B	Height (Mounted) C	Width (Widest Point) D
3.40 in. (8.6 cm)	0.85 in. (2.1 cm)	0.72 in. (1.8 cm)	2.14 in. (5.4 cm)

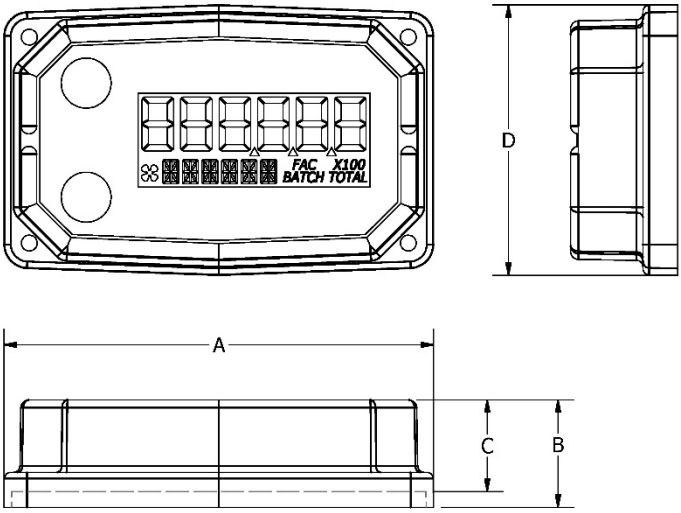

Figure 2

SPECIFICATIONS (continued)

COMPUTER DISPLAY FEATURES

Familiarize yourself with the computer display features before installation and use.

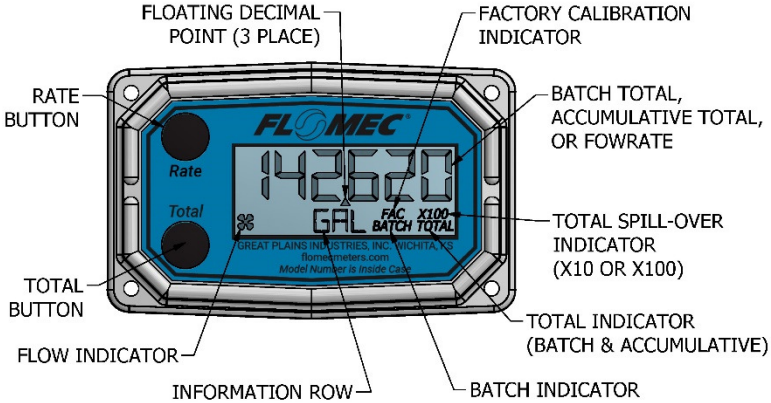

Figure 3

APPROVAL RATINGS

QSE Q9 Computer Electronics

CE RoHS 2002/95/EC

INSTALLATION

PRODUCT DESCRIPTION

This computer electronics is designed specifically for use on FLOMEC® QSE Meters. It is also designed to work with several accessory output modules.

The CMOS, microprocessor-based electronics have extremely low power requirements and data retention capabilities in both RAM and ROM. Information is clearly displayed on a large 6-digit LCD readout with three-point floating decimal for totals from .001 to 999,999 (x1), 9,999,990 (x10), or 99,999,900 (x100). All operations are easily accessed with the two buttons on the front panel.

INSTALLATION

Before installation, ensure your computer model meets your specific needs. Refer to the Specifications Section to confirm required features. The model number of your computer is displayed on the outside wall of the computer housing and another inside the computer housing on the bottom of the PC Board.

If you ordered your QSE Q9 Computer with a QSE meter, it is installed at the factory. The QSE Q9 Computer is NOT compatible with QSI1, QSI2, or QSI3 communications electronics.

If you ordered your QSE Q9 Computer separately from a QSE meter (i.e. repair part), follow the instructions below to install on a QSE meter.

If you ordered your QSE Q9 Computer with one of our several types of meter adapter kits, follow the separate instructions enclosed with the kit to install the unit.

In every case, please review and thoroughly understand all manuals and installation instructions before proceeding.

- Make sure the seal is seated in its groove on the bottom of the computer (see Figure 4a & 4b).
- Insert the long pins of the 10-pin bridge connector about halfway into the 10-pin PC board connector.
- Then, align the 10-pin connector on the computer with the short pins on the 10-pin bridge connector and engage pins using gentle force until the display is seated on the cover plate (see Figure 4b).

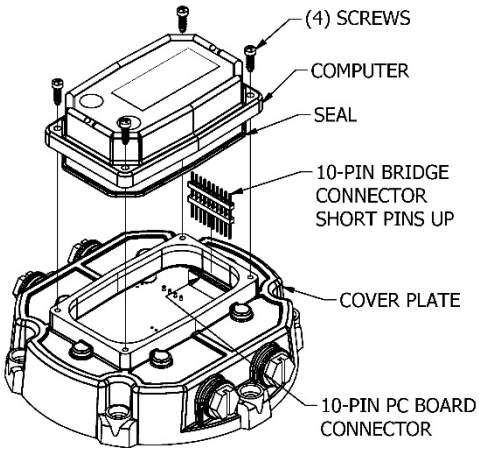

Figure 4a

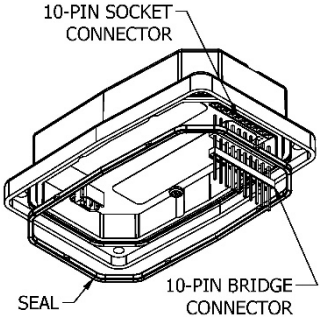

Figure 4b

- When the computer is seated on the cover plate, the pins are fully engaged. Secure the computer to the cover plate with the four screws at the corners of the computer housing. Make sure the seal is fully seated before tightening the screws.

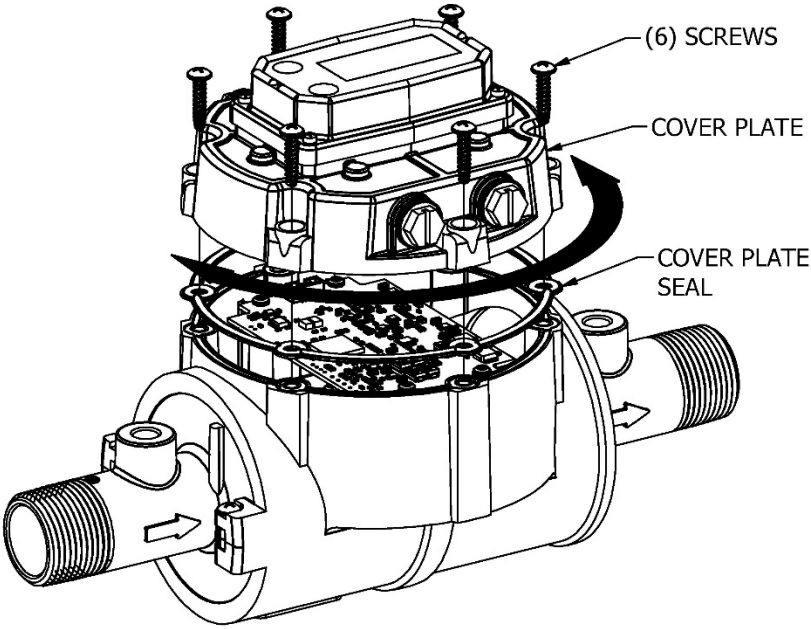

Figure 4c

QSE meters are designed to measure flow in only one direction. If the viewing orientation of the display is upside down in your installation, remove the (6) screws retaining the cover plate to the meter, turn the cover plate with display as required and reinstall the screws (see Figure 4c).

A ribbon cable connects the electronics within the cover plate to electronics within the meter body and allows 180 degrees of movement in either direction.

Make sure the cover plate seal is fully seated before tightening the screws.

OPERATION

COMPUTER DISPLAY

All operations are revealed on the LCD using the large 6-characters in the top row and smaller characters and symbols in the second row. These characters and symbols indicate information regarding totals, flow, calibration, units of measure and operational messages

Push button operation varies dependent upon the various modes of operation, i.e. Normal Operation mode, Field Calibration mode, and User Configuration mode. Their operation will be described in their respective sections.

ACTIVATE THE COMPUTER

When power is applied, the computer is on continuously and always ready to perform.

Figure 5

When power is initially applied, the initialization routine will start the LCD display blank, and then display “HELLO” on the top row and “Q9Disp” on the information row for one second. (See Figure 5)

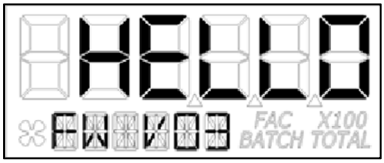

Figure 6

The LCD will then display “HELLO” on the top row and “FW Vxx” on the information row for one second. The Vxx will be the version of the software installed on the display. Example: “FW V03” indicates firmware version 3 installed on the display. (See Figure 6)

General

The computer maintains two totals; Batch total and accumulative total. The batch total can be reset to measure flow during a single use. The accumulative total provides continuous measurement and can only be reset by removing power to the display, pressing and holding down the **Total** button, and reapplying power to the computer.

The button usage map on the next page, and the user configuration process map later in the manual, is useful for understanding where the various menus are located within the software programming and the route to get to a specific menu.

Each of these maps are followed by user instructions explaining each menu.

OPERATION

NORMAL OPERATION MODE

Button Usage Map – Normal Operation Mode

BUTTON

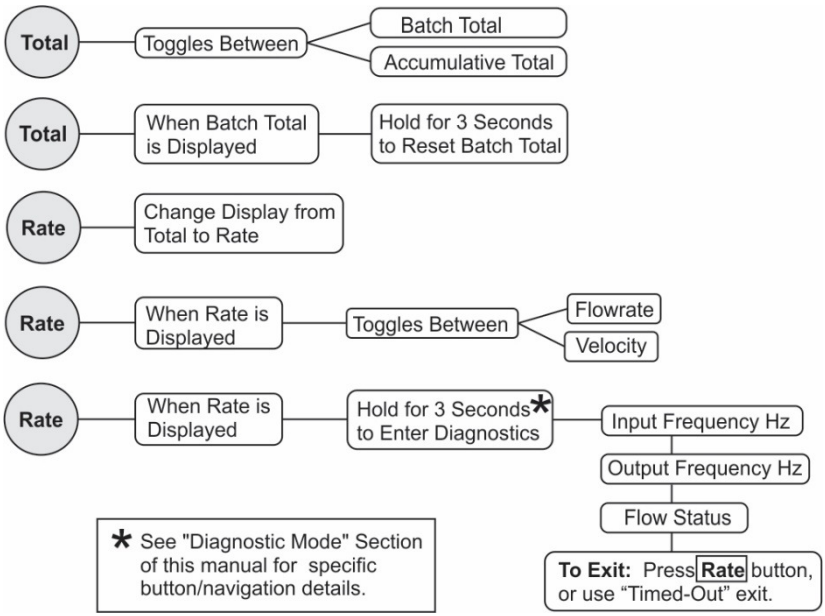

Button Operation (Normal Operation Mode)

Total Button: Change between batch total and accumulative total.

When a total is displayed, pressing the **Total** button changes the top row of large display digits between batch total and accumulative total. The information row will change to the proper units and the corresponding icons will be shown, i.e. **TOTAL** or **BATCH TOTAL**. (See Figures 7-1 and 7-2)

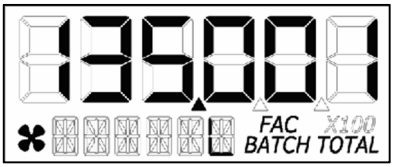

(Batch Total-Litres)

Figure 7-1

(Accumulative Total-Gallons)

Figure 7-2

OPERATION (continued)

NORMAL OPERATION MODE (continued)

Total Button: Batch total reset.

When a batch total (see Figure 8-1) is displayed, press and hold the **Total** button for 3 seconds; the software will display a three-second count down, and then reset the batch total to zero. (See Figures 8-2 thru 8-4)

Figure 8-1

NOTE: If the **Total** button is released prior to count down completion, the software returns to batch total screen. (See Figure 8-1)

Figure 8-2

Figure 8-3

NOTE: After count down completes, display will show 0.000 until user releases the **Total** button. (See Figure 8-3)

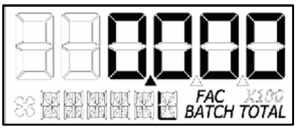

Figure 8-4

NOTE: After the **Total** button is released, the display will return to Batch Total screen and will increment the total if flow is detected. (See Figure 8-4)

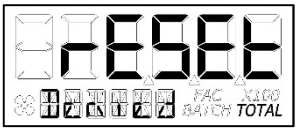

Figure 8-5

NOTE: When the accumulative total is displayed in Normal Operation Mode, it cannot be reset using the **Total** button.

Accumulative total can only be reset by removing the power from the display, holding down the **Total** button, and reapplying power to the display. If the user attempts to reset it using the **Total** button, the software will display a “Reset Denied” message on the LCD until the button is released. (See Figure 8-5).

OPERATION (continued)

NORMAL OPERATION MODE (continued)

Rate Button: Change display from total to rate.

When a total is displayed, pressing the **Rate** button changes the top row of large display digits from a total to a rate display. The information row will change to the proper units and the corresponding icons will also be shown, i.e. GPM, L, etc. (See Figure 9)

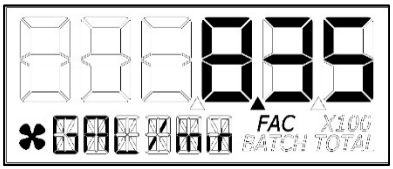

Figure 9

NOTE: To go back to a total when a rate is displayed, press the **Total** button and the display changes to the last shown total, either accumulative or batch. The information row will change to the proper unit and the corresponding icons will also be shown, i.e. TOTAL or BATCH TOTAL.

Rate Button: Change display from rate to velocity.

When a rate (see Figure 9) is displayed, pressing the **Rate** button changes the display between flow rate and velocity. The information row will change to the proper units and the corresponding icons will also be shown. (See Figures 10-1 and 10-2)

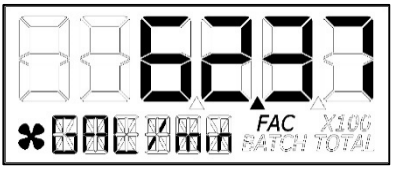

(Flowrate)

Figure 10-1

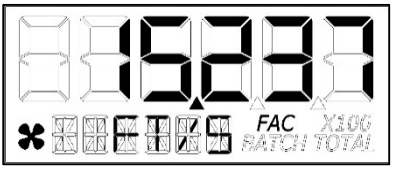

(Velocity)

Figure 10-2

Diagnostic Mode

Rate Button: Display diagnostic menu.

When a rate is being displayed, press and hold the **Rate** Button for 3 seconds; the software will display a three second diagnostic count down (see Figure 11-1), then display the first of four diagnostic screens (see Figures 11-2 thru 11-6).

Figure 11-1

NOTE: The diagnostic screens are reference information screens only. They cannot be edited.

Within the diagnostic menu: Pressing the **Total** button will advance to the next screen; pressing the **Rate** button at any time will exit the diagnostic menu. Upon exit, the display will return to the rate display.

There is a **90 second "no action" clock** running when in diagnostic mode. After 90 seconds with no button push to reset the clock, the computer will automatically exit and return to the rate display.

OPERATION (continued)

NORMAL OPERATION MODE (continued)

Diagnostic Mode (continued)

Screen 1 – Input Frequency

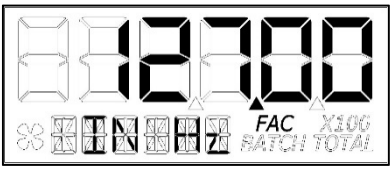

Figure 11-2

After the button is released, the software will advance and display the input frequency in Hz.

The top row is used to indicate frequency. The information row will display messages. (See Figure 11-2)

Screen 2 – Output Frequency

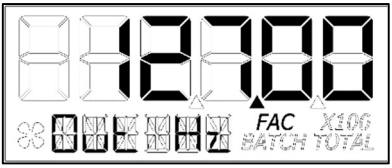

Figure 11-3

Advancing to next screen will display the output frequency in Hz.

The top row is used to indicate frequency. The information row will display messages. (See Figure 11-3)

Screen 3 – Flow Status

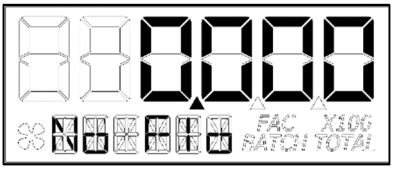

Figure 11-4

Advancing to the next screen will display the flow status.

The top row is used to indicate flow rate in the volume units programmed into the computer. The information row will display messages, i.e.: No Flo, Lo Flo, or Hi Flo. (See Figure 11-4)

OPERATION (continued)

USER CONFIGURATION MODE

General Notes for User Configuration Mode Menus

1. The term "**focus**" as used in this manual indicates an active editable item. Focused items will constantly flash ON/OFF.
2. **Advance focus:** Press the **Total** button. Advancing focus will move focus to the next editable item to the right. If already on right most item, the focus will go back to the start position in a round robin fashion. If only (1) item is editable, advancing focus will move the focus to next menu.
3. **Increment the value of editable item:** Press the **Rate** button. If editing a number, the number will increment in a round robin fashion. If editing a text option, focus will advance thru a predefined list of text depending on the active menu and item. Advancing to the next item or menu with a unit in focus will select that unit.
4. **Advance focus to next menu:** Press and hold the **Total** button and then press the **Rate** button.
5. **Retrogress focus back to previous editable item or previous menu:** Press and hold the **Rate** button and then press the **Total** button.
6. **Exit any user configuration mode menu:** Press and hold the **Total** button first and immediately press and hold the **Rate** button, holding both buttons down for 3 seconds.

NOTE: Unless an exception is noted, there is a **90 second "no action" clock** running when in user configuration mode. After 90 seconds with no button push to reset the clock, the computer will automatically exit and return to normal operating mode. There is **no automatic "save"**, all entries made up to that point would be lost.

Entering User Configuration Mode

While in normal operation mode, the user can enter the display user configuration mode by pressing and holding the **Total** and **Rate** buttons simultaneously for 3 seconds from any screen; the software will display a three second count down sequence (see Figure 12-1), then reset the display to configuration mode. (See Figure 12-2)

Figure 12-1

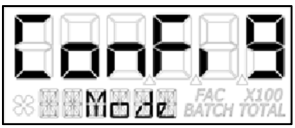

NOTE: After three seconds, the LCD will display "ConFig" on the top row and "Mode" on the bottom row until the user releases both of the buttons; the display will then immediately show the first menu (PIN) of the configuration process menus.

Figure 12-2

NOTE: If the user releases both or either button before the countdown completes, the display will return to normal operation mode.

OPERATION (continued)

USER CONFIGURATION MODE (continued)

General Notes for User Configuration Mode Menus

Once in configuration mode, the user can then proceed thru the configuration process menus as shown on the “configuration process map” below.

The software will retain your entries as you progress through the user configuration menus, however, there is **no automatic “save”** when exiting. Instead, you will be shown a “save” screen to enter “yes or no” to save your entries. (See Figure 13)

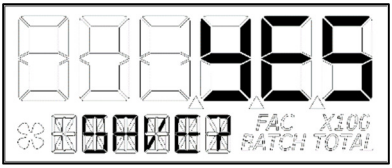

Figure 13

Use the **Rate** button to change between “yes” or “no”. Use the **Total** button to advance to the next display. Advancing to the next display will perform the “save” selection you made and return the display to normal operation mode. The last shown screen in that mode will be displayed.

NOTE: The **Total** button must be pressed twice (to verify the end user is "certain" of selection).

Configuration Process Map – User Configuration Mode

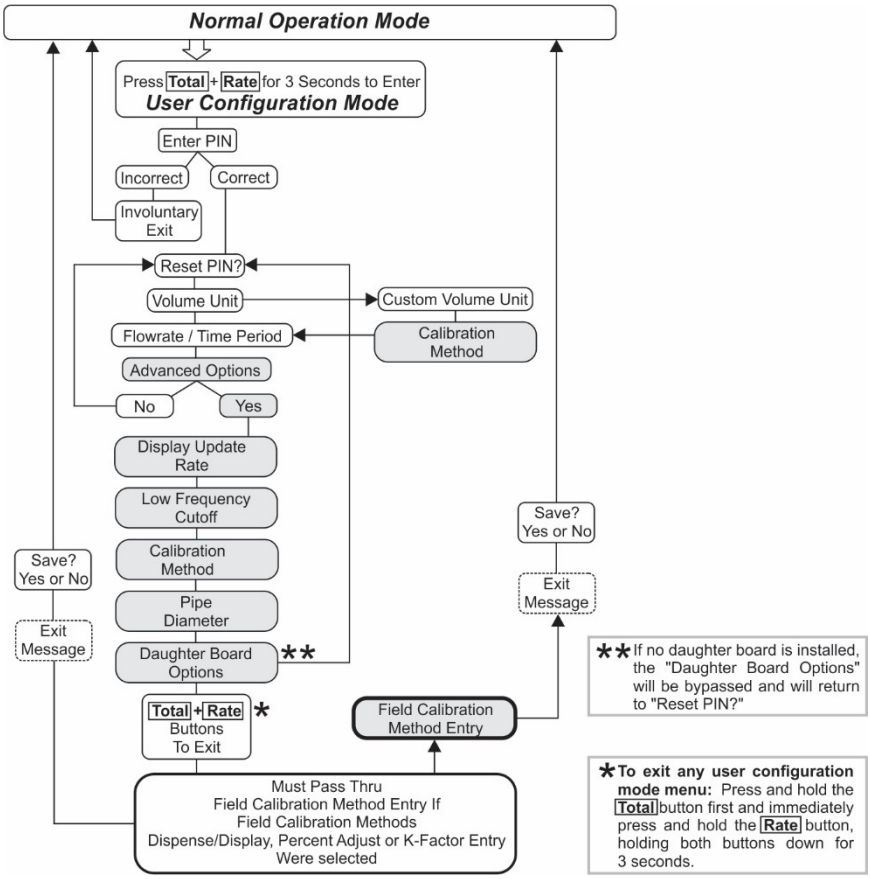

OPERATION (continued)

USER CONFIGURATION MODE (continued)

PIN Menu

The first menu in the configuration mode is for the user to enter a Personal Identification Number (PIN) to secure the configuration of the computer and continue with making changes.

The default user PIN is 0000. Using this default PIN will unlock the meter unless the PIN has been reset by the user.

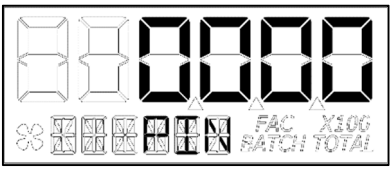

The initial user PIN entry screen will show 0000. The left most digit will be flashing ON/OFF to indicate focus if the user wants to change the PIN. (See Figure 14-1)

Figure 14-1

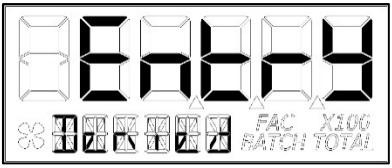

If the entered PIN was incorrect, the screen momentarily displays “Entry Denied” (See Figure 14-2) then returns automatically to normal operation display.

Figure 14-2

NOTE: Using the user default PIN, or the user specific PIN (if previously reset), and advancing focus to the next menu, the software will compare the entered PIN with the PIN stored in the computer. If a match is found, the next menu will be shown allowing the user to reset the PIN if desired.

Reset PIN Menu

If the PIN was entered correctly, the next menu will be displayed and allow reset of the PIN if desired. (See Figure 15-1)

Figure 15-1

Figure 15-2

The “N” will be in focus (flashing). To decline resetting the PIN, advance focus to next menu.

To reset the PIN, increment the “N” to “Y” (see figure 15-2) and advance focus to next screen. (See Figure 16)

OPERATION (continued)

USER CONFIGURATION MODE (continued)

Reset PIN Menu (continued)

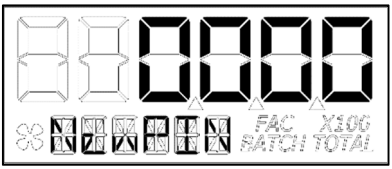

Figure 16

If “Y” was selected, the previous PIN will be shown. The left most digit of PIN is in focus. Increment the value of each digit as desired as you advance focus through the digits.

After reset of the PIN, advance focus to next menu.

Volume Unit Menu

On this menu the user will be allowed to enter their volume unit of measure from a list of options. (See Figure 17).

Volume Unit	Abbreviation	Volume Unit	Abbreviation
Gallon	GAL	Litre	L
Imperial Gallon	IGAL	Millilitre	mL
Custom	Set by user	Cubic Metre	m3
Acre-Foot	Ac--Ft	Cubic Centimetre	cm3
Quart	Qt	Cubic Foot	FT3
Ounce	OZ	Barrel	bbl

Figure 17

Figure 18

On the volume unit menu (see Figure 18) the bottom row of characters will be in focus to indicate they are editable.

Advancing to the next menu with a unit in focus will select that unit of measure.

Changing between different volume units will not corrupt the Total's contents. For example, in GAL (gallon) mode, the computer totalizes 10.000 gallons, if the user changes to L (litre) mode, the display will read 37.854 litres (the same volume, different unit).

Custom Volume Unit Label Menu

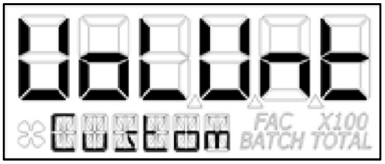

Figure 19

The software also allows the user to create their own “Custom” volume unit (see Figure 19). Advancing to the next menu with the “Custom” volume unit in focus will shunt the user to a new menu (see below) that will allow the user to create a new label, or reuse one already stored in computer memory.

OPERATION (continued)

USER CONFIGURATION MODE (continued)

Custom Volume Unit Label Menu (continued)

If the computer is new or has no previous custom volume unit label stored in memory, the screen will appear with three dashes. (See Figure 20)

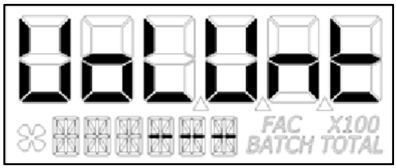

Figure 20

The left most of the dashes will be in focus and the user can select a letter from the list of upper case letters. An empty space will be shown on the menu screen as an underscore "_"during creation, but the underscore will not show when displaying the unit label in operation.

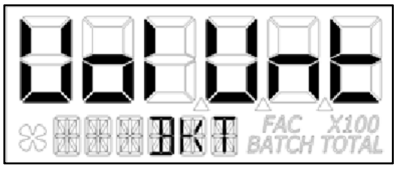

Figure 21

If the user has previously entered a custom volume unit label, it will be read from computer memory and the unit label will be displayed (see Figure 21) with the left most character in focus. The label can then be changed if desired.

NOTE: Once the custom volume unit label is created, the user will be required to enter a calibration method for the custom volume unit created. Therefore, upon advancing focus to next menu, the user will be shunted to the calibration method menu to select a method of calibrating their custom volume unit.

NOTE: The calibration method section that defines the methods of calibration can be found later in this manual.

After selecting the calibration method, advance focus to the next menu that will be flow rate/ time period menu.

NOTE: The computer will remember your calibration method selection. If you selected field calibration methods dispense display, percent adjust, or K-factor method, you will be given the opportunity to configure that method at the point you decide to exit the user configuration mode. At that point, the software will automatically shunt you to the field calibration method entry menu.

The field calibration method entry section that defines the field calibration procedure of the selected method can be found later in this manual.

NOTE: The factory calibration stored in the unit will never be lost.

OPERATION (continued)

USER CONFIGURATION MODE (continued)

Flow Rate / Time Period Menu

This menu is used to choose the period of time over which the flow rate is calculated. The options for this menu are: per day, hour, minute, or second. (See Figure 22-1)

Time Base	Abbreviation
Day	d
Hour	h
Minute	min
Second	s

Figure 22-1

Figure 22-2

When the screen is displayed, the software will show the current selected volume unit and time period (see Figure 22-2) and will display both in the bottom row with a back-slash between them. The time period unit will be in focus and can be edited by the user.

After advancing to the next configuration menu, the time period will be temporarily stored (see Figure 13 and its description for permanently saving) to computer memory.

OPERATION (continued)

USER CONFIGURATION MODE (Advanced Options)

Advanced Options Menu

This menu is used to access the Advanced Options. The **Rate** button is used to change between NO and YES selections. The **Total** button is used to select either NO or YES for the Advanced Options menu.

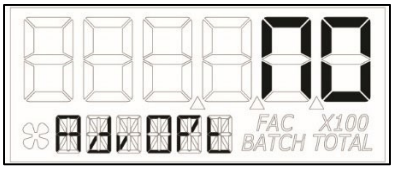

Figure 23-1

Select NO to return to Normal User Configuration menu (See Figure 23-1).

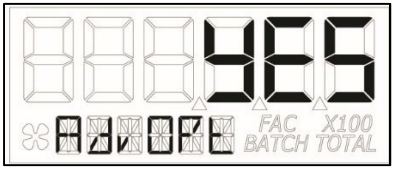

Figure 23-2

Select YES to enter into the Advanced Options menu (See Figure 23-2).

Display Update Rate Menu

This menu allows a validated user to change the update rate of the display for flow rate, velocity, batch total, and accumulative total.

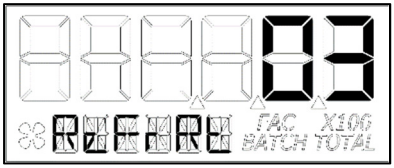

Figure 24

The range of this menu is from 1 to 60 seconds. Although the computer is maintaining constant calculations, the rate that the new information is displayed is controlled by this menu. (See Figure 24)

NOTE: “00” may be selected, but that value will represent “01” (1 second).

Low Frequency Cutoff Menu

This menu allows a validated user to enter a minimum allowed pulse input frequency to filter out any low frequency input pulses which can be generated when the meter is subject to mechanical vibrations. These vibrations could cause the totalizer to add “phantom” volume to the display totalization values. (See Figure 25)

The software will read the minimum input frequency from the computer and display it on the top row with the left most digit in focus. Increment range is from 0 Hz to 255 Hz.

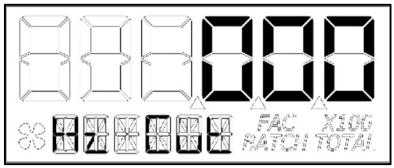

Figure 25

If 0 is set, the software will disable the input frequency filtering algorithm.

When advancing to the next menu, the software will temporarily store (see Figure 13 and its description for permanently saving) the selected value to the computer.

OPERATION (continued)

USER CONFIGURATION MODE (Advanced Options) (continued)

Calibration Method Selection Menu

This menu is used to define which calibration method will be used in normal operation. The calibration method the user previously selected (if any) will be shown on the display first. The bottom row of characters will be in focus indicating that the user can change the calibration method. Use the **Rate** button to move through the various calibration method options, and use the **Total** button to make "Calibration Method" selection/advance to next menu option.

Factory Calibration: All units are configured with a "factory" calibration. This factory calibration (FAC icon displayed below 6-digit display) is permanently programmed into the computer and is not user adjustable.

NOTE: The factory calibration stored in the unit will never be lost

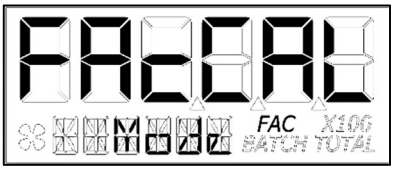

Figure 26-1

Factory calibration is the typical use method (see Figure 26-1). Prior to shipping from the factory, the display will be configured and calibrated to the meter body on which it is installed (or going to be installed).

When the user selects this option the FAC icon will be “ON” to indicate that the display is using its factory calibration table. This method does not support field calibration.

Field Calibration: If one of the following calibration methods is selected (dispense display, percent adjust, or K-factor entry), the user will be routed through the field calibration method entry menu, before saving configuration options, to make specific entries for the selection.

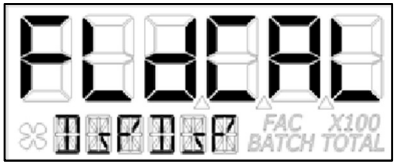

Figure 26-2

Dispense/Display is a field calibration method by which the user will dispense a known volume of fluid and the software will keep track of the pulse count during the dispense operation. The user will then enter the known volume into the display and the software will calculate a K-factor for the volume dispensed. (See Figure 26-2)

Figure 26-3

Percent Adjust method is a field calibration method by which the user will enter a percentage amount to adjust K-factor values in the factory programmed K-factor table. Once the percentage is input by the user, the software will apply this percentage adjustment to all calculated and displayed values. (See Figure 26-3)

This method is good for users who simply want to adjust their meter by a percentage amount.

OPERATION (continued)

USER CONFIGURATION MODE (Advanced Options) (continued)

Calibration Method Selection Menu (continued)

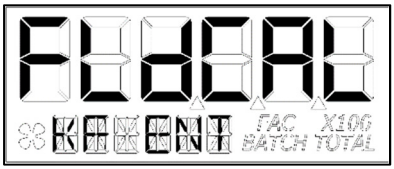

Figure 26-4

K-Factor Entry method (see Figure 26-4) is a field calibration method by which the user can input either a single point or multipoint calibration table.

From 1 to 5 unique K-factor and frequency values can be entered and will be stored in the custom K-factor table in the computer.

Inner Pipe Diameter Menu

This menu is to allow the user to enter a pipe inner diameter (ID) which will allow the display to calculate and display the fluid velocity thru the meter. The pipe dimension unit can be selected as either inches (IN) or millimetres (mm) as preferred by user (see Figure 27-1).

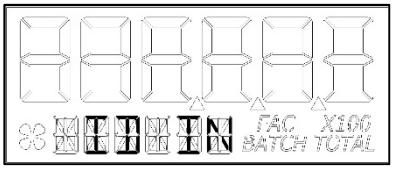

Figure 27-1

On this screen, the software will read the pipe ID measurement unit label from the computer and display it on the bottom row as either English (IN) or metric (mm) units. The unit label (IN or mm) will have the focus to indicate that it can be changed.

Pressing the **Rate** button will change between inches (IN) and millimetres (mm). Pressing the **Total** button will temporarily store (see Figure 13 and its description for permanently saving) the selection and allow the user to edit the pipe inner diameter value.

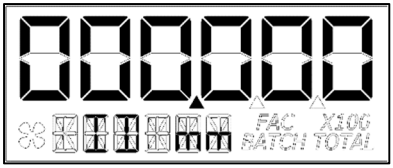

Figure 27-2

The software will also read the pipe ID numeric value including decimal point from the computer. The left most decimal point is in focus to indicate it can be changed (see Figure 27-2).

Pressing the **Rate** button moves the decimal point focus to the next decimal point to the right until reaching the end, then, turns off all three. An additional button press will cycle the focus back to the left most decimal point in a round robin fashion. When the decimal point is in the correct position, pressing the **Total** button will lock its location. The screen then advances focus to the left most numeric value digit to allow the user to edit the pipe ID value.

Pipe ID values can be from 0.001 to 999999. The inner pipe diameter entries will be used in the fluid velocity rate calculation during normal operation.

Pressing the **Rate** button will increment the digit in focus. Pressing the **Total** button will advance focus to the next digit. To advance focus to the next menu, press and hold the **Total** button and then press the **Rate** button (see Configuration Process Map).

NOTE: Upon entering the next menu, the software will temporarily store the pipe ID entries in the computer.

NOTE: Failure to save your entries on the “save” screen will cause the entries to be discarded.

OPERATION (continued)

USER CONFIGURATION MODE (Advanced Options) (continued)

DAUGHTER BOARD MODULES

Output K-Factor Menu (Requires Pulse Access or 4-20mA Daughter Board Module)

The scaled pulse output K-factor menu allows the user to enter a K-factor for the pulse output of the meter or advance focus to the next menu.

The software will read the pulse output K-factor from the computer and display it on the top row. The **Total** and **Rate** button presses for this menu function the same as the button presses for the Inner Pipe Diameter Menu shown on the previous page. (See Figure 28–The zero values shown represent an unscaled Pulse Output.)

NOTE: Pulse output values cannot exceed pulse input values. Pulse output can only be scaled down.

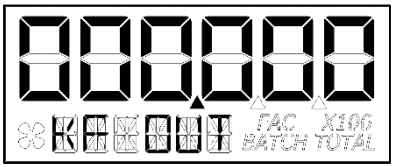

Figure 28

When advancing focus to the next menu the software will temporarily store (see Figure 13 and its description for permanently saving) the Scaled Pulse K- factor to the computer.

4-20mA Menu (Requires 4-20mA Daughter Board Module)

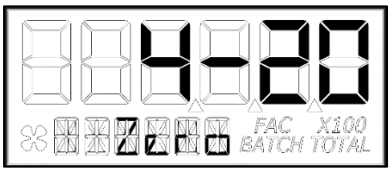

Figure 29-1

"Zero" Setting: This figure will flash for 1 second before allowing the user to change the 4mA or "zero" setting (see Figure 29-1). This setting will already be configured for the minimum flowrate of the meter this QSE Q9 was attached to, when shipped from the factory.

The **Total** and **Rate** button presses for this menu function the same as the button presses for the Inner Pipe Diameter Menu shown on the previous page.

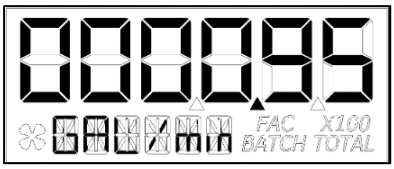

Figure 29-2

NOTE: Figure 29-2 shows the display when changing "zero" or 4mA Flowrate Settings.

Figure 29-3

"Span" Setting: This figure will flash for 1 second before allowing the user to change the 20mA or "span" setting (see Figure 29-3). This setting will already be configured for the maximum flowrate of the meter this QSE Q9 was attached to when shipped from the factory.

The **Total** and **Rate** button presses for this menu function the same as the button presses for the Inner Pipe Diameter Menu shown on the previous page.

OPERATION (continued)

USER CONFIGURATION MODE (Advanced Options) (continued)

DAUGHTER BOARD MODULES (continued)

4-20mA Menu (Requires 4-20mA Daughter Board Module) (continued)

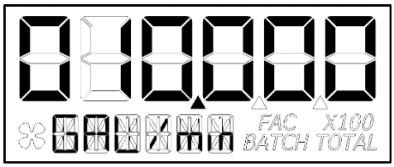

Figure 29-4

NOTE: Figure 29-4 shows the display when changing “span” or 20mA Flowrate Settings.

USER CONFIGURATION MODE (Field Calibration Mode)

Field Calibration Method

General

The field calibration method may be set by the user, and can be changed or modified at any time using a field calibration method described in this section. Totals or flowrate derived from the field calibration are being invoked when the (FAC) icon is no longer visible below the 6-digit display.

Factory calibration settings are programmed into each computer during manufacturing, using Stoddard test solvent at 70° F (21° C) for meters up to 1 inch. Meters 1-1/2 inch and larger are factory calibrated using water at 70° F (21° C).

Settings are correct for light liquids such as water, gasoline or diesel. Readings using the factory calibration (FAC) may not be accurate in some situations, for example, "heavy" liquids such as motor oil, under extreme temperature conditions, non-standard plumbing configurations or with fluids other than those mentioned above.

For improved accuracy under such conditions, the computer allows for field calibration, that is, user entry of custom calibration parameters. A "single point" field calibration curve may yield acceptable accuracy when used in a non-standard application; however, the computer is capable of programming a “five point” field calibration curve.

NOTE: If the calibration method is changed when in user configuration mode, i.e., not using the default factory calibration (FAC), the programming will allow the user to adjust the user programmable calibration table for the calibration method selected. This is done by shunting the user to the field calibration method entry menu specific to that calibration method upon exit from the user configuration mode.

Verify Accuracy before Beginning Field Calibration

For the most accurate results, dispense at a flowrate which best simulates your actual operating conditions. Avoid "dribbling" more fluid or repeatedly starting and stopping the flow. This can result in less accurate calibrations. Make sure you meet the meter's minimum flowrate requirements.

The use of a uniformly dependable, accurate calibration container is recommended for the most accurate results. A five-gallon calibration container is available in the parts section of this manual. For best results, the meter should be installed and purged of air before field calibration.

Due to high flowrates on meters 2 inch and larger, it is strongly recommended that field calibration be completed with a combination of volume and weight determined with fine resolution scales.

OPERATION (continued)

USER CONFIGURATION MODE (Field Calibration Mode) (continued)

Field Calibration Method Entry

At the beginning of the calibration method entry menu, the software will allow the user to start the calibration process or to exit back to normal operation. (See Figures 30-1 & 30-2)

The bottom row of characters will be in focus to indicate that the user can select between either “Start” or “Exit” by advancing focus. The **Rate** button changes between START & EXIT while the **Total** button makes the actual selection.

NOTE: The **Total** button must be pressed twice (to verify the end user is "certain" of selection).

Figure 30-1

If “Start” is in focus when advancing to the next menu, the software will automatically advance to the calibration menu for the calibration method the user previously selected.

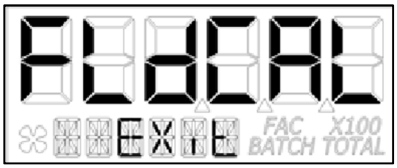

Figure 30-2

If “Exit” is in focus when advancing to the next menu, the software will display a “save” screen (see Figure 13) to enter “yes or no” to save your entries.

Dispense Display Method

Dispense/Display is a field calibration method by which the user will dispense a known volume of fluid and the software will keep track of the pulse count during the dispense operation. The user will then enter the known volume into the display and the software will calculate a K-factor for the volume dispensed. (See Figure 31-1)

Figure 31-1

The software will allow the user to dispense a known volume in order to create a custom K-factor. This will not over write the existing factory calibration table.

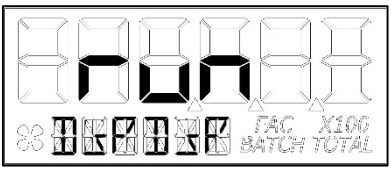

Figure 31-2

The first screen in this calibration method will show “run” indicating that the computer is waiting for flow to start. (See Figure 31-2)

NOTE: Pressing any single button while on this screen will not have any effect. Pressing and holding the **Total** button first and immediately pressing and holding the **Rate** button, holding both buttons down for 3 seconds, will allow the user to exit the calibration mode.

OPERATION (continued)

USER CONFIGURATION MODE (Field Calibration Mode) (continued)

Dispense Display Method (continued)

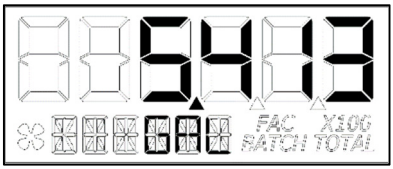

Figure 31-3

Begin dispensing into a container of known accurate volume. As soon as pulses are detected by the software, the screen will change to display the volume being dispensed on the top row and the volume unit on the bottom row. (See Figure 31-3)

NOTE: The user is permitted approximately 10 minutes to dispense fluid into the container. Dispensing fluid longer than 10 minutes will prompt a configuration mode exit, and any configuration mode edits/changes the user made will **NOT BE SAVED**.

When the user is finished with the run, press and hold the **Total** button until the left most digit begins to flash indicating it is in focus, then release the **Total** button.

Pressing the **Rate** button will increment the digit in focus. Pressing the **Total** button will advance focus to the next digit.

To advance focus to the next menu, press and hold the **Total** button and then press the **Rate** button.

NOTE: Advancing focus to the next menu will lock in the entered volume.

The software will then calculate the K-factor for the volume entered based on the pulse count for the run and the volume entered. The average frequency and the K-factor will be entered into the custom user K-factor table for “run”.

Exit Dispense Display Method

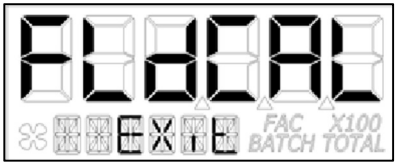

Figure 32

NOTE: “FldCAL” will then be displayed on the top row and “Exit” on the bottom row (see Figure 32). The software will temporarily store the sorted table of frequencies and K-factors, then display the “Save” screen. (See Figure 13)

NOTE: Failure to save your entries on the “save” screen will cause the entries to be discarded.

OPERATION (continued)

USER CONFIGURATION MODE (Field Calibration Mode) (continued)

Percent Adjust Method (Correction Factor)

Percent adjust method is a field calibration method by which the user will enter a percentage amount to adjust K-factor values in the factory programmed K-factor table. Once the percentage is input by the user, the software will apply this percentage adjustment to all calculated and displayed values. (See Figure 33-1)

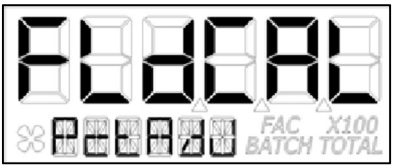

Figure 33-1

This will not over write the existing factory calibration table, instead, it applies a calculation to the existing values for use by the computer.

This method is good for users who simply want to adjust their meter by a percentage amount.

Figure 33-2

The top row left most character will be in focus to indicate the user can change the value. The left most character is the sign of the value. The decimal point is not adjustable. The range for the values are: -99.999% to +99.999%. The software will display the user applied percent adjustment on the top row. (See Figure 33-2)

Press the **Rate** button to change between (dash "-") and (underscore "_"). A dash indicates a negative value. An underscore indicates a positive value. Press the **Total** button to select/lock dash "-" (*negative value*) or underscore "_" (*positive value*). The focus will then advance to the left most digit.

NOTE: A selected positive value will show no sign while a negative value will show a solid dash.

Once the left most digit is in focus, pressing the **Rate** button will increment the digit in focus. Pressing the **Total** button will advance the focus to the next digit.

When all digits are entered correctly, exit by pressing and holding the **Total** button and then pressing the **Rate** button.

NOTE: "FldCAL" will then be displayed on the top row and "Exit" on the bottom row (see Figure 32). The software will temporarily store the adjusted percentage correction, then display the "Save" screen. (See Figure 13)

NOTE: Failure to save your entries on the "save" screen will cause the entries to be discarded.

OPERATION (continued)

USER CONFIGURATION MODE (Field Calibration Mode) (continued)

K-Factor Entry Method - Frequency

K-factor entry method (see Figure 34-1) is a field calibration method by which the user can input either a single point or multipoint calibration table.

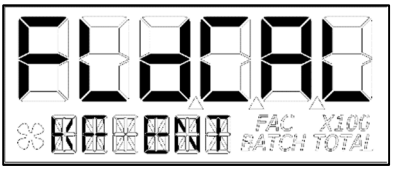

Figure 34-1

From 1 to 5 unique K-factor and frequency values can be entered and will be stored in the custom K-factor table in the computer. This will not over write the existing factory calibration table.

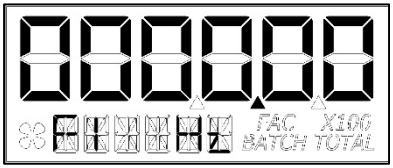

Figure 34-2

The software will read the existing K-factor table from the computer and will display the first frequency on the top row (see Figure 34-2) with the left most character in focus to indicate the user can change the value. Minimum frequency value allowed is 0.25 Hz and the maximum allowable frequency value is 3000.00 Hz. The decimal point for the frequency value is fixed.

Pressing the **Rate** button will increment the digit in focus. Pressing the **Total** button will advance the focus to the next digit.

Once the correct frequency is entered, pressing and holding the **Total** button, then pressing the **Rate** Button will advance to the next screen. (See Figure 34-3)

NOTE: Entering all zeros (see Figure 34-2) will store the value as a minimum frequency (0.25 Hz).

OPERATION (continued)

USER CONFIGURATION MODE (Field Calibration Mode) (continued)

K-Factor Entry Method – K-Factor Value

The software will read the existing K-factor table from the computer and will display the first K-factor on the top row. The bottom row displays the K-factor table entry position (1 thru 5) for the volume unit shown. (See Figure 34-3.)

Pressing the **Rate** button moves the decimal point focus to the next decimal point to the right until reaching the end, then, turns off all three. An additional button press will cycle the focus back to the left most decimal point in a round robin fashion. When the decimal point is in the correct position, pressing the **Total** button will lock its location. The screen then advances focus to the left most numeric value digit to allow the user to edit the K-Factor value.

Pressing the **Rate** button will increment the digit in focus. Pressing the **Total** button will move the focus to the next digit. Pressing and holding the **Total** button, then pressing the **Rate** button will advance to the next screen (see Figures 34-4 and 34-5).

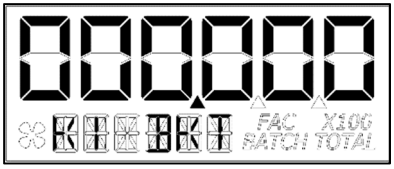

NOTE: User input K-factor entry values will disable the (FAC) icon. The K-factor range is 0.001 to 999999.

Figure 34-3

After completing the first table entry of frequency and K-factor, the display will ask the user if there are additional points to enter. The **Rate** button changes between Y (Yes) & N (No) while the **Total** button makes the actual selection (See Figures 34-4 & 34-5)

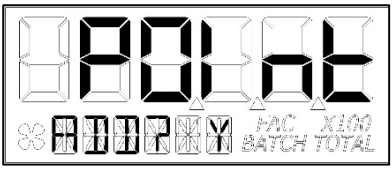

Figure 34-4

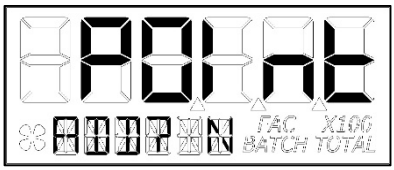

Figure 34-5

If the user chooses YES, the previous screens will repeat for Frequencies 2 – 5 and K-factors 2 – 5.

NOTE: If the table stops short of 5 points, then only the points entered will be used to define the calibration curve.

If the user chooses NO (or after the fifth table entry of frequency and K-factor) the software will show the FLdCAL Exit screen (see Figure 32) for one second, and will then exit field calibration mode. The software will temporarily store the K-factor table values in the computer, and then display the “Save” screen (see Figure 13).

NOTE: Failure to save your entries on the “save” screen will cause the entries to be discarded.

TROUBLESHOOTING

Symptom	Probable Cause	Corrective Action
A. INACCURATE TOTALS / FLOWRATE.	1. Field Calibration not performed properly.	Field calibrate again or select Factory Calibration.
	2. Factory Calibration not suitable for liquid being measured.	Perform a Field Calibration according to Field Calibration Section.
	3. Meter operated below minimum flowrate.	Increase flowrate.
	4. Electrodes partially clogged with dried liquid.	Remove meter. Clean carefully. Make sure electrodes are clean.
	5. Sealant material stuck to electrodes.	Remove meter. Clean carefully. Make sure electrodes are clean.
	6. Meter installed too close to fittings.	Install correctly.
	7. Meter installed to close to motors or electrically “noisy” environment.	Install correctly.
B. BUTTON NOT WORKING.	1. Button plunger not fully pressed.	Ensure finger covers entire button.
	2. Button only operates upon release.	Release button to see display change.
	3. Assembly issue.	Contact the factory.
	4. Configuration issue.	Contact the factory.
C. “BA0.000” IS DISPLAYED.	1. Configuration issue.	a. Reset Batch and Accumulative Totals. b. Performing a Field Calibration may allow desired performance. c. Contact the factory.
D. WEIRD CHARACTERS ON SCREEN.	1. Assembly issue.	Contact the factory.
	2. Bad LCD.	Contact the factory.
E. DISPLAY IS FADED OR BLANK.	1. No power to the display.	Check that external power to the meter is functioning. Check that 10-pin bridge connector is seated correctly.
	2. Ambient temperature is too cold.	Place bare hand or warmer on display for temporary readability.
	3. Computer defective.	Contact the factory.

TROUBLESHOOTING (continued)

Symptom	Probable Cause	Corrective Action
F. ENTIRE SCREEN "BLUISH".	1. Ambient / fluid temperature is reaching upper heat limits.	If readable, display is fine. If a nuisance, consider Remote Display kit options.
G. NO FLOW ON SCREEN WHEN FLUID IS MOVING IN PIPE.	1. Field Calibration not performed correctly. 2. Electrodes partially clogged with dried liquid. 3. Sealant material stuck to electrodes. 4. Computer defective.	Field calibrate again or select Factory Calibration. Remove meter. Clean carefully. Make sure electrodes are clean. Remove meter. Clean carefully. Make sure electrodes are clean. Contact the factory.
H. EXCESSIVE FLOW ON SCREEN WHEN FLUID IS **NOT** MOVING IN PIPE.	1. Electro-Magnetic Interference (EMI) – Too close to motor or other electrically "noisy" equipment.	Move installation point of meter away from EMI sources.
I. PROBLEMS GETTING INTO FIELD CALIBRATION MODE.	1. Wrong button sequence.	Proceed with calibration using Field Calibration Section instructions that are included in this manual.
J. PROBLEMS NAVIGATING "DIAGNOSTIC MODE", "CONFIGURATION MODE", OR "NORMAL OPERATION MODE".	1. See this owner's manual Table of Contents for page number information for each specific "Mode" Section.	See specific "Mode" Section that is included in this owner's manual.
K. DAUGHTER BOARD MODULE OUTPUT INACCURATE.	1. See specific Daughter Board Module owner's manual.	See specific Daughter Board Module owner's manual.

MAINTENANCE

There are no user maintenance requirements for the QSE Q9 computer other than the normal care you would give to sensitive electronic equipment.

- Do not clean exterior of computer assembly with Isopropyl Alcohol.
- If the computer assembly is removed, make sure the seal is fully seated and the 10-pin bridge connector is seated correctly (see Figures 4a & 4b) before placing the computer electronics back on the meter and tightening the (4) retaining screws.

PARTS

The factory, when provided with model number and serial number, can replace your entire computer electronics assembly. Order replacement kits, parts, and accessories with the part numbers shown below.

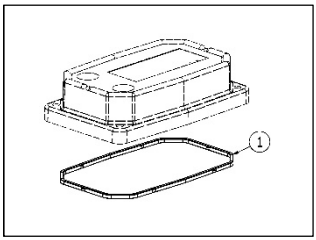

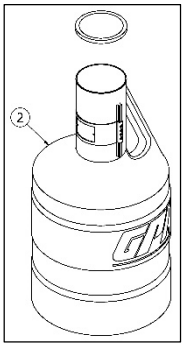

Item No.	Part No.	Description	No. Reqd.
1	901002-52	Seal, Computer	1
2	116000-1	Large Calibration Container (5 Gallon)	Optional

SERVICE

For warranty consideration, parts, or other service information, please contact your local distributor. If you need further assistance, contact the GPI Customer Service Department in Wichita, Kansas, during normal business hours.

A toll free number is provided for your convenience.

1-888-996-3837

To obtain prompt, efficient service, always be prepared with the following information:

- The model number of your computer.
  Printed on label located on bottom of the computer PC board. (See Figure 1)

- The serial number or manufacturing date code of your computer.
  Printed on label located on bottom of the computer PC board. (See Figure 1)

- Part descriptions and numbers.

For warranty work, always be prepared with your original sales slip or other evidence of purchase date.

IMPORTANT: Please contact GPI before returning any parts. It may be possible to diagnose the trouble and identify needed parts in a telephone call.

FLOMEC® TWO-YEAR LIMITED WARRANTY

Great Plains Industries, Inc. 5252 E. 36th Street North, Wichita, KS USA 67220-3205, hereby provides a limited warranty against defects in material and workmanship on all products manufactured by Great Plains Industries, Inc. This product includes a 2-year warranty. Manufacturer's sole obligation under the foregoing warranties will be limited to either, at Manufacturer's option, replacing or repairing defective Goods (subject to limitations hereinafter provided) or refunding the purchase price for such Goods theretofore paid by the Buyer, and Buyer's exclusive remedy for breach of any such warranties will be enforcement of such obligations of Manufacturer. The warranty shall extend to the purchaser of this product and to any person to whom such product is transferred during the warranty period.

The warranty period shall begin on the date of manufacture or on the date of purchase with an original sales receipt. This warranty shall not apply if:

A. the product has been altered or modified outside the warrantor's duly appointed representative;

B. the product has been subjected to neglect, misuse, abuse or damage or has been installed or operated other than in accordance with the manufacturer's operating instructions.

To make a claim against this warranty, or for technical assistance or repair, contact your FLOMEC distributor or contact FLOMEC at one of the locations below.

In North or South America contact

Great Plains Industries, Inc.
5252 East 36th St. North
Wichita, KS 67220-3205
USA

888-996-3837

www.flomecmeters.com
(North America)

Outside North or South America contact

GPI Australia
(Trimec Industries Pty. Ltd.)
12/7-11 Parraweena Road
Caringbah NSW 2229
Australia

+61 02 9540 4433

www.flomec.com.au

The company will step you through a product troubleshooting process to determine appropriate corrective actions.

GREAT PLAINS INDUSTRIES, INC., EXCLUDES LIABILITY UNDER THIS WARRANTY FOR DIRECT, INDIRECT, INCIDENTAL AND CONSEQUENTIAL DAMAGES INCURRED IN THE USE OR LOSS OF USE OF THE PRODUCT WARRANTED HEREUNDER.

The company herewith expressly disclaims any warranty of merchantability or fitness for any particular purpose other than for which it was designed.

This warranty gives you specific rights and you may also have other rights which vary from U.S. state to U.S. state.

NOTE: In compliance with MAGNUSON MOSS CONSUMER WARRANTY ACT – Part 702 (governs the resale availability of the warranty terms).

Wichita · Sydney

GREAT PLAINS INDUSTRIES GPI

Great Plains Industries, Inc. / 888-996-3837 / flomecmeters.com